This is a digital copy of a book that was preserved for generations on library shelves before it was carefully scanned by Google as part of a project to make the world's books discoverable online.

It has survived long enough for the copyright to expire and the book to enter the public domain. A public domain book is one that was never subject to copyright or whose legal copyright term has expired. Whether a book is in the public domain may vary country to country. Public domain books are our gateways to the past, representing a wealth of history, culture and knowledge that's often difficult to discover.

Marks, notations and other marginalia present in the original volume will appear in this file - a reminder of this book's long journey from the publisher to a library and finally to you.

Usage guidelines

Google is proud to partner with libraries to digitize public domain materials and make them widely accessible. Public domain books belong to the public and we are merely their custodians. Nevertheless, this work is expensive, so in order to keep providing this resource, we have taken steps to prevent abuse by commercial parties, including placing technical restrictions on automated querying.

We also ask that you:

+ *Make non-commercial use of the files* We designed Google Book Search for use by individuals, and we request that you use these files for personal, non-commercial purposes.
+ *Refrain from automated querying* Do not send automated queries of any sort to Google's system: If you are conducting research on machine translation, optical character recognition or other areas where access to a large amount of text is helpful, please contact us. We encourage the use of public domain materials for these purposes and may be able to help.
+ *Maintain attribution* The Google "watermark" you see on each file is essential for informing people about this project and helping them find additional materials through Google Book Search. Please do not remove it.
+ *Keep it legal* Whatever your use, remember that you are responsible for ensuring that what you are doing is legal. Do not assume that just because we believe a book is in the public domain for users in the United States, that the work is also in the public domain for users in other countries. Whether a book is still in copyright varies from country to country, and we can't offer guidance on whether any specific use of any specific book is allowed. Please do not assume that a book's appearance in Google Book Search means it can be used in any manner anywhere in the world. Copyright infringement liability can be quite severe.

About Google Book Search

Google's mission is to organize the world's information and to make it universally accessible and useful. Google Book Search helps readers discover the world's books while helping authors and publishers reach new audiences. You can search through the full text of this book on the web at `http://books.google.com/`

A 511578

Digitized by Google

1837
ARTES VERITAS SCIENTIA
LIBRARY OF THE
UNIVERSITY OF MICHIGAN
E PLURIBUS UNUM
TUEBOR
SI QUAERIS PENINSULAM AMOENAM
CIRCUMSPICE
DEPARTMENT
OF
ENGINEERING

Digitized by Google

TA
1
I613
T7

Digitized by Google

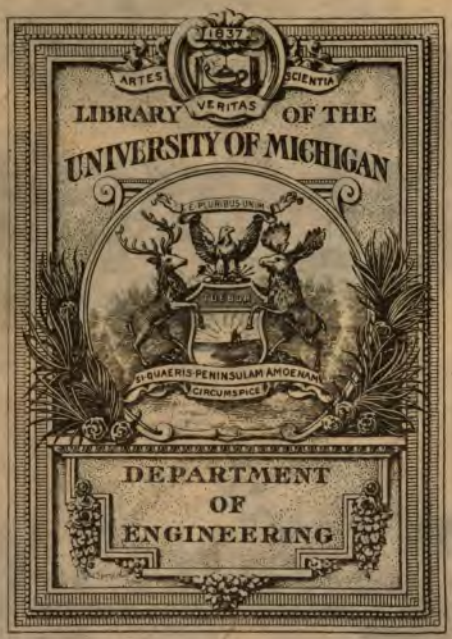

Digitized by Google

TA
1
I613
T7

Digitized by Google

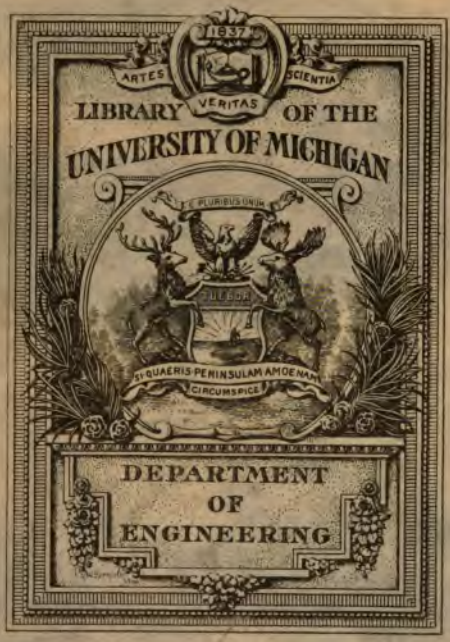

Digitized by Google

TA
1
.J613
T7

Digitized by Google

Digitized by Google

Digitized by Google

Digitized by Google

Digitized by Google

JOHN HENRY RYAN,
President 1902-1903.

Digitized by Google

TRANSACTIONS

OF THE

INSTITUTION OF CIVIL ENGINEERS

OF

IRELAND.

SIXTY-EIGHTH SESSION, TO MAY, 1902.

VOL. XXIX.

DUBLIN:
PRINTED FOR THE INSTITUTION
BY JOHN FALCONER, 53 UPPER SACKVILLE-STREET.

1903.

Digitized by Google

Digitized by Google

CONTENTS.

	PAGE
Annual General Meeting - - - - -	2
Irish Railways: their Progress During the Last Decade of the Last Century. By JOSEPH TATLOW, Associate -	2
The Supply of Electrical Energy in Cities. By MARK RUDDLE, Member - - - - -	30
Notes on the Design of Breakwaters. By FRED J. DICK, Member - - - - - -	86
The Strengths of the Materials of Construction. By W. E. LILLY, Member - - - - -	104
Vote of Condolence with the Family of the Late MR. W. W. WILSON, Past-President - - - -	123
"*Refrigeration,*" *with Special Reference to the Dublin Pure Ice and Cold Storage Company.* By MR. F. W. HIGGINBOTHAM, Associate - - - -	125

Report of Council for 1901–1902, *Auditors' Report and Statement of Accounts for twelve months ending* 31*st December*, 1901.

List of Members for 1902.

198574

Digitized by Google

Digitized by Google

TRANSACTIONS

OF

THE INSTITUTION OF CIVIL ENGINEERS

OF IRELAND.

[6th November, 1901].

MR. EDWARD GLOVER, President, in the Chair.

The following candidate was balloted for and duly elected :—

MR. JAMES O'CONNELL, as Associate Member.

Digitized by Google

[4th December, 1901].

Annual General Meeting.

Mr. Edward Glover, President, in the Chair.

The Officers and Council for 1902 were balloted for and duly elected. (See List of Members.)

Professor W. E. Thrift, F.T.C.D., was made an Honorary Member of the Institution.

The following candidates were balloted for and duly elected:—

Messrs. John Basil Hope, Frank Latham and John William Towle, as Members, and John Joseph Byrne, as Associate Member.

On the motion of the President, seconded by the Past President, W. H. Mills, a vote of condolence was passed with the family of the late Mr. Martin Atock, who had been connected with the Institution since 1874, and who had filled the office of Vice-President.

Irish Railways: their Progress During the Last Decade of the Last Century.

By Joseph Tatlow, Associate.

The community at large, I fancy, knows but little of the steady and substantial progress which, despite a diminishing population, has been made by the Irish railways during the last ten years. The Railway Returns of the Board of Trade and the Census Tables disclose facts which are interesting and instructive, and I propose to examine their impartial statistics, and to show not only the positive progress of the Irish railways during the decade, but also

Digitized by Google

their relative progress as compared with the railways of England and of Scotland.

Population affects all statistics relating to commercial undertakings, and I would draw attention to the striking fact that whilst the population of England has *increased* by 9·13 per cent., and of Scotland by 4·69 per cent., the population of Ireland *decreased* by 4·29 per cent. during the period under review. This decreased population means much more than the mere probability of a relatively less number of railway passengers in Ireland than in the sister countries. It means that in Ireland thousands have annually left their native land because their native land is poor; because it cannot furnish them with the means of support; whereas England and Scotland are rich and their prosperity is so great that an ever growing population lives upon their resources under conditions of yearly increasing comfort. It means that the circumstances of the mass of the people who are left in Ireland are such that they cannot afford to travel for recreation or for pleasure, and travel only on occasions of necessity. They have not the means which the great artisan class of England enjoys, and thus the classes in Ireland from which the railway companies might expect to derive additional receipts by a growing disposition for railway travelling are necessarily fewer in number as compared with England and Scotland.

Would it be surprising if, handicapped as the Irish railways are by this potent circumstance of a diminishing population, their returns were to show a stagnant or even a backward tendency? As the contrary is the case, and as the rate of progress, when population is taken into account, has been greater in Ireland than in England, does it not indicate that Irish railway management has not lagged behind the times?

Digitized by Google

The actual decrease in the population of Ireland during the decade was 202,000, as compared with an increase in England of more than 2½ millions, and in Scotland of nearly 200,000! Where shall we look for a parallel to this condition of Ireland? In what other country in Europe has population decreased like this? It is emigration, of course—the ceaseless drain of emigration—which accounts for the diminution of the people. But for this Ireland would show an increase equal to that of Scotland. For the number of emigrants in ten years was no less than 433,000, the annual exodus varying between the extremes of 32,000 and 60,000 souls. In 1900, the last year of the decade, the number was 45,000.

Some of these emigrants, no doubt, returned after a short absence from their native land, but they did not return in numbers sufficient to affect the question; and, speaking broadly, these are the facts—the population tables show a decrease of 202,000; the emigrants numbered 433,000, so that during the decade, had emigration been suspended, Ireland had shown an increase of population of more than 230,000, being at the rate of nearly 5 per cent., against Scotland 200,000, and 4·69 per cent., instead of the decrease already stated.

Leaving—though somewhat reluctantly—this interesting matter of population, the first point which engages attention, in contemplating the subject of railway progress, is naturally that of capital expenditure, for without that expenditure, which private enterprise has so liberally provided, the railways would not exist. What, therefore, has private enterprise done in this direction during the last ten years?

In 1890 the paid up capital of Irish railways was, in round figures, £37,298,000. This in the year 1900 had risen to £39,369,000, being an increase of over 5½ per cent.

Digitized by Google

In England, during the same period, railway capital had increased by 18 per cent., and in Scotland by 22 per cent. In the case of Ireland the figures I have named do not represent the whole of the capital expenditure on Irish railways, as during the period free grants were made by the Government towards the construction of railways for opening up poor districts, amounting to about £1,500,000. If this sum is included the increase in the capital of the Irish railways amounts to nearly 10 per cent. The very large increase in Scotland is, no doubt, due to the fact that during the period under review a costly system of underground railways has been constructed in the City of Glasgow.

The Government grants towards railways in Ireland were principally for the construction of lines in the Connemara, Achill, Kerry, and Donegal districts, where the population is sparse, the traffic inconsiderable, and the outlook such as to render it useless to expect that private enterprise would ever venture to provide funds for railways, there being no prospect whatever of a return upon the investment. Those railways (known as the Balfour Lines) are worked and maintained by the existing railway companies, and it may be safely affirmed that the cost of working and maintenance added to the capital outlay which the companies incurred in addition to the Government grants towards construction, imposes a burden upon some, if not all, of the companies, which, at the invitation of the Government, undertook the responsibility of their working and maintenance. That these railways have been, and are, of inestimable benefit to the country they serve is a fact which no one can deny. They have, in addition to the ordinary benefits which railways confer upon poor and remote districts, most satisfactorily developed the fishing industry, and opened up to the tourist

Digitized by Google

and to the world at large those attractions of the beautiful coast of Ireland, of which the tourist and the world at large previously knew so little.

I may illustrate what these railways have accomplished for the trade of the fisherman by stating that in the year 1890, before any of them were constructed (the Act for their construction being passed in 1889), the total quantity of fish traffic railway borne in Ireland was under 8,000 tons, whereas in the year 1900 it had increased to close upon 16,000 tons, an addition of 100 per cent.

I have alluded to the moneys expended by the Irish railway companies in connection with the Balfour Lines. It is true they were made chiefly out of funds provided by Government but the companies largely subscribed towards their cost. In the case of my own company (the Midland Great Western), whilst the Government grants for the Clifden, Killala, Mallaranny, and Achill lines amounted to £440,000, the company expended no less than £352,000 of their own capital in respect of these railways, including the provision of the necessary rolling stock. The Balfour Lines were in the first instance designed as light railways, but the companies decided to have them constructed in a thoroughly substantial manner, as extensions of their own railways, upon which their heavy engines and rolling stock could be worked. The Government grants were made upon estimates for light railways, and the companies in carrying out their views had, therefore, to expend a considerable amount of capital. That such expenditure by the companies has been of great benefit to the country cannot be questioned; that it has benefited the shareholders is open to argument These observations in regard to additional expenditure by the railway companies apply more particularly to the lines constructed in Kerry, Connemara, and Achill, which

Digitized by Google

now are worked by the Great Southern and Western and Midland Great Western Railway Companies, and are not applicable to the Balfour Lines in Donegal. I allude to the Killybegs, Glenties, and Carndonagh lines, which were opened in the years 1893, 1895, and 1901, respectively, and to the line now in course of construction from Letterkenny to Burton Port. These lines comprise 110 miles of railway, are all of narrow gauge and light construction, and practically the whole of the necessary capital has been provided by the Government.

Before leaving the interesting question of railway capital expenditure I would dwell for a moment on the amount of additional rolling stock which has been provided in Ireland during the decade, and which in the face of a continually diminishing population partakes, I think, of the remarkable. During that period 118 engines, 541 passenger carriages, and 3,862 wagons have been added to the working stock of the companies. These, at a moderate estimate, would cost more than a million pounds sterling, which has been expended for the better carrying on of the railway business of the country. Without fear of contradiction, I say the better carrying on of railway business. No doubt some of this rolling stock was necessitated by the opening of the Balfour railways, but not to any considerable extent, as the comparatively light traffic of those railways demanded only a correspondingly moderate number of additional vehicles. It was to give a more abundant supply of wagons to the public, and to run more passenger trains for their conveyance that this large sum was, in the main, expended.

Compared with England and Scotland, the following table shows how well Ireland stands in respect of additional rolling stock, bearing in mind the prejudicial factor of population.

Digitized by Google

The increase in the number of engines and vehicles during the decade has been:—

—	England	Scotland	Ireland
Engines ...	31 per cent.	29 per cent.	17 per cent.
Carriages ...	30 „	34 „	22 „
Wagons ...	30 „	36 „	26 „

The usefulness of a railway is in direct proportion to the work it performs, and this is most effectively measured by the number of train miles run. How does Ireland stand in this respect? With a diminishing population has her train mileage increased or decreased, and how does she compare with her sister countries? The figures show Ireland in the most favourable light, and prove that the Irish railways at the end of the century were not only serving the public much better than when the decade began, but had, moreover, in this respect the advantage of the railways in England and in Scotland. In 1890 the number of train miles run in Ireland were 13,600,000, and in 1900 17,300,000, being an increase of 27 per cent. It would naturally be expected that England and Scotland would show much higher figures, but in England the increase only amounted to 28 per cent., and in Scotland to 30 per cent.

I must admit that in Ireland some of this increased train mileage was due to the new Balfour Lines, but in the sparsely-populated districts which are served by those Lines, a comparatively small train service only is necessary, and it is therefore evident that the Irish railways have abundantly increased the train service on their

Digitized by Google

original lines, to the great benefit of the public. The increase in the mileage of the Irish railways during the decade was 391 miles, in Scotland 323 miles, in England 1,068 miles—the total number of miles open for traffic standing respectively in the year 1900, Ireland 3,183, Scotland 3,485, and England 15,187 miles.

I turn to the number of passengers carried. In Ireland in the year 1890 the total number of passengers was 21,400,000. In 1900, 27,600,000—an increase of about six and a quarter millions, or 29 per cent. For the conveyance of these passengers the money received by the companies increased by 19 per cent., the average amount paid per passenger having fallen from 1s. 3d. in 1890 to 1s. 1¾d. in 1900. In other words, had the travelling public paid the same average fare per passenger in 1900 as in 1890 the Irish railway conpanies would have received an additional sum in 1900 of £140,000. In recent years cheap and excursion fares have been greatly extended—advantages of which the public have availed themselves, and the companies have carried a largely increased number of passengers for comparatively smaller remuneration.

In England during the same period the increased number of passengers carried was 38 per cent., and in Scotland 62 per cent. The very considerable increase in Scotland is doubtless due to the underground railways already alluded to, and to the growth of suburban lines, which have enormously added to the number of passenger journeys.

If we regard the number of railway passengers from the point of view of population, the returns show that in England during the ten years the number of passengers per inhabitant increased by 26 per cent., in Scotland 55 per cent., and in Ireland by 35 per cent., so that in the last decade of the last century railway travelling per inhabi-

Digitized by Google

tant in Ireland increased at a greater rate than in wealthy England.

From passengers to parcels is an easy transition. And what of parcels traffic? The carriage of parcels may seem a minor branch of railway business, but it is really a subject of great importance to Ireland, including, as it does, such items as poultry, butter, eggs, and fish. How does Ireland fare in the transit of this traffic? In Ireland the increase in receipts has been 63 per cent., in Scotland 53 per cent., and in England 50 per cent., so for parcels business Ireland leads in the march of progress. A very large proportion of this traffic, as is well known, is sent to England and it does not look as if Ireland was being driven out of the English markets in the matter of agricultural, dairy, and farm products. The importance to Ireland of this business—the sending of butter, poultry, fish and eggs to the teeming population of England—cannot be exaggerated. What a possibility of increasing remunerative trade lies herein. The sweetest butter, the richest eggs, the fattest poultry, the freshest fish the world can produce might be sent in still larger and ever-growing volume, for the teeming and increasing population is there to consume them. All that is required is knowledge, industry, method, care. The new Board of Agriculture will probably do much to help and encourage this, but one's chiefest hope is in the people themselves. May time develop and strengthen their industry and self-reliance—the only sound foundation upon which commercial prosperity can be based. The Irish railway companies are doing their part. They have long had in operation a complete system of through bookings at very moderate rates for these perishable commodities, not only throughout Ireland, but also with England and Scotland, and they certainly do all they can to encourage and develop the traffic. It is gratify-

Digitized by Google

ing to see that on the part of the traders greater care is being exercised in the methods of preparing and packing butter and eggs to ensure their reaching the markets in good and attractive condition. The railway companies have recently adopted specially designed and constructed vehicles for the conveyance of butter traffic.

Another item of railway business which is satisfactorily increasing is the periodical or season ticket traffic. Since the opening of the decade the increase in the number of these tickets has been 40 per cent. in Ireland, as against 38 per cent. in England, and 49 per cent. in Scotland—so that here again Ireland compares favourably with England and Scotland, and, population considered, leads the way.

With this I exhaust the subject of traffic by passenger trains, and will now deal with traffic conveyed by goods and live stock trains.

I will divide this part of the subject into two heads—viz., Goods Traffic and Live Stock Traffic.

The following figures show the comparison of receipts for the three countries:—

Digitized by Google

GOODS AND LIVE STOCK TRAFFIC.

	England				Scotland				Ireland			
	1900	1890	Increase	Per cent.	1900	1890	Increase	Per cent.	1900	1890	Increase	Per cent.
Goods -	44,444,640	35,079,967	9,366,673	26·70	6,199,418	4,602,772	1,596,646	34·69	1,391,744	1,162,668	229,076	19·55
Live Stock	895,322	898,213	Decrease 2,891	0·32	232,275	216,130	16,145	7·47	307,165	262,632	44,533	16·96
Total	45,339,962	35,976,180	9,363,782	26·03	6,431,693	4,818,902	1,612,791	33·47	1,698,909	1,425,300	273,609	19·20

November 7, 1901.

Digitized by Google

In Ireland the increase in goods traffic is close on 20 per cent., compared with 27 per cent. in England, and 35 per cent. in Scotland. In goods traffic is included minerals, the chief item of which is, of course, coal. How different are the circumstances of the three countries in regard to mineral traffic! In England the receipts from minerals in the year 1900 were 22 per cent. of the total railway traffic receipts, in Scotland 27 per cent., and in Ireland only 5 per cent. In other words, the receipts from minerals in that year were in England nearly £20,000,000, in Scotland £3,000,000, in Ireland £200,000! But for this difference in the mineral resources of the three countries what a glowing tale Ireland would have to tell! Had Mother Nature not forgotten this bountiful dowry of coal, industries in Ireland would have flourished, and towns and cities prospered; the population would have grown instead of diminished; the 3,000 odd miles of Irish railways would have earned for goods and mineral traffic alone (excluding live stock) probably £1,800 per mile of line (the same as the railways in Scotland) instead of less than £450, the actual mileage receipt during the year 1900.

With regard, however, to live stock traffic, Ireland is far ahead, the comparison of receipts being for England a decrease of 0·32 per cent., Scotland an increase of 7·47 per cent., and Ireland an increase of 16·96 per cent. during the decade. When we contemplate the severe foreign competition to which Ireland is subject in its live stock business, an increase of 17 per cent. is somewhat reassuring, and encourages the hope that Ireland may hold her own in this, the first of her industries, and that the Irish railways may continue to enjoy an increasing live stock traffic.

During the decade a great improvement has been made in the trucks used for the conveyance of live stock, in the running of live stock trains, in the accommodation for the

Digitized by Google

traffic at stations, in the provision of sidings—the benefits of which to the trade have undoubtedly been very substantial.

To the Irish railway companies the live stock traffic is comparatively of much greater moment than is the same traffic to the English and Scotch companies. In Ireland it represents 8 per cent. of the total traffic receipts, in England 1 per cent., and in Scotland 2 per cent.

In the year 1890 the Irish railway receipts from live stock traffic were £263,000. In 1900 they reached £307,000—the increase being £44,000.

Having now reviewed the growth of the railway business under the separate heads of Passengers, Parcels, Goods, and Live Stock, it will be interesting to look at the total railway traffic receipts from all sources. The Board of Trade Returns give the following figures:—

—	1900	1890	Increase	Percentage of Increase
	£	£	£	
England ...	89,392,501	68,272,908	21,119,593	31
Scotland ...	11,603,010	8,550,457	3,052,553	36
Ireland ...	3,806,347	3,125,337	681,010	22

Remembering the growth of population in England and Scotland, and the diminution in Ireland, it must be admitted that the Irish Railway Companies, with an increased business of 22 per cent., need not be ashamed of the comparison.

Comparing the total railway traffic receipts per head of population, the figures show an increase of 27 per cent. in Ireland, 30 per cent. in Scotland, and 20 per cent. in England, so that the total railway traffic receipts in Ire-

Digitized by Google

land have per inhabitant developed at a much greater ratio than in England.

I now leave the question of the revenue, and turn to the subject of working expenses. The first serious fact which arrests attention is that although the revenue of the Irish railways during the decade has developed to the extent of 22 per cent., the cost of earning that revenue has increased by no less than 29 per cent. In Ireland the working expenses have grown from 56 to 60 per cent. of the total receipts; in England from 54 to 62 per cent., and in Scotland from 52 to 57 per cent. The total amount expended in Ireland in 1890 was £1,760,000, and in 1900 £2,270,000, being an increase in the ten years of £510,000, or at the rate of £51,000 a year.

The item which has most increased is locomotive power, consequent upon the larger number of train miles run—to which I have already referred—and to some extent due to the increased cost of materials and coal which affected the railway companies during the latter half of the year 1900, but there cannot be any doubt that fully one-half of the increase has gone in the payment of wages. Speaking generally, the total expenses on Irish railways are about equally divided between wages and materials, and it is probably within the mark to say that one moiety of the amount of the increase in the expenditure between the years 1890 and 1900 represents money disbursed as wages to the working staff. Year by year the population is diminishing, chiefly in the classes from which railway employees are drawn, and year by year the numbers employed by the railways are steadily increasing. The total expenditure on the Irish railways in the year 1900 had increased by the sum of 2s. 7d. per head of population, or by 34 per cent. In 1890 the expenses were 7s. 6d. per head of population, and in 1900 10s. 1d.

Digitized by Google

The amount paid in local rates has increased by 56 per cent., although the net revenue upon which the valuation of the railways is presumably based has only increased by 12 per cent.

The increase in the maintenance of permanent way charges was £91,000 showing that the Irish railways are certainly not starving their permanent way. On the contrary, the permanent way has been immensely improved in recent years. Demands for quicker train services, the introduction of larger, more commodious, and heavier vehicles, the more liberal provision of through carriages necessitating longer trains, have been met by the supply of heavier locomotives requiring rails of greater weight, and a more substantial bedway. Stations have been improved and enlarged, and better accommodation for passengers has been provided, all of which has swelled the expenditure under the head of Maintenance of Way and Works.

I now arrive at the question of Net Railway Receipts. These have increased in Ireland by 12 per cent., as against 7 per cent. in England, and 23 per cent. in Scotland, so that in this respect, also, the Irish railway companies compare well with England. The amount of net receipts of the Irish railways available for the payment of interest and dividends for the year 1900 was £1,530,000, as compared with £1,360,000 in the year 1890—the last year of the previous decade.

The net revenue sufficed to give a return upon the paid up capital in the case of the Irish railways at the rate of £3 17s. 10d. per cent., of the Scotch railways at the rate of £4 2s. 2d. per cent., and of the English railways at the rate of £4 0s. 5d. per cent. Shareholders of the Irish railways have, therefore, to be content with smaller profits than holders of English and Scotch Railway Stocks, and no

Digitized by Google

one, I venture to say, can regard an average of £3 17s. 10d. per centum as an unreasonable return to those who furnished the funds for the construction of the Irish railways.

I would now briefly draw attention to several matters which, although not mentioned in the Board of Trade Returns, unmistakably establish the last decade of the last century as a period distinguished for progress on the part of the Irish railways. That decade has seen the introduction of breakfast and dining cars, of parlour cars, of long bogie corridor carriages, the lighting of carriages by electricity, the building of railway hotels in attractive tourist districts, the establishment of numerous coach and steamboat tours, the quickening of the tourist traffic generally, the opening by the Irish railway companies of a tourist inquiry office at very considerable expense in London, at that busy centre of the travelling world, Charing Cross. This office affords the public, whether travelling for business or pleasure, all needful information with regard to travelling in Ireland, and issues to them the tickets they require. Inquiries are made at this London office by travellers, or would-be travellers, of all nationalities, from the indolent Oriental of the East to the alert and energetic American of the West. The decade has witnessed the introduction of larger locomotives of increased power, the laying of a considerable extent of heavier permanent way, the completion of the block and interlocking, and electric train staff and tablet systems for single lines. It has seen a great and widespread extension of cheap fares, tourist, excursion, week-end, and market tickets, and perhaps I may, in conclusion, be allowed to quote from the last annual report (the eleventh) of the Hotel and Restaurant Proprietors' Association of Ireland. The report, *inter alia*, states:—

"*The facilities for travelling to all places of attraction*

Digitized by Google

in Ireland are now as perfect as can well be under existing conditions, and the cost of touring has been brought to so reasonable a figure as to leave small cause for complaint."

The record of the last decade of the last century in the matter of the railways of Ireland is, I submit, by the figures and facts I have adduced, distinguished by enterprise, improvement, and progress. But the first year of the new century marks a pause in the progress of the revenue, whilst the expenses show no signs of abatement in their upward tendency. A depression in business is universally operating. We can only hope that its duration will be temporary, that the Irish railway revenues will recover their elasticity, and that the present decade will end more brightly than it has begun.

Mr. B. D. Wise, in proposing a vote of thanks to the author, said that the paper was a very interesting one, and knowing the author as he did, they could rely upon the statements made in the paper.

There was no doubt some of the facts stated in the paper were somewhat surprising, and he was sure that the gentlemen who do not look at railway statistics would be rather surprised to see how successful, on the whole, the Irish railways have been in the face of the ever-decreasing population.

He hardly agreed that the question of the population interferes very much with the question of the prosperity of the railways. He considered the emigrant class did not patronise railways very much.

Within the last ten years railways had been put to very large expenditure in providing safety appliances for travelling, such as continuous brakes, &c. Of course these were of very great advantage, but they were a very expensive burden on the railway companies.

Digitized by Google

There was no doubt that the development of the tourist traffic would add a good deal to the prosperity of the railways. A good deal had been done in this direction during the last three years, but there was room for further improvement. The company with which he was connected had spent a considerable amount of money in making attractions for the tourists. They had made sea-walks, built promenades, &c., and the results were very satisfactory. He was sorry to say that the people in the different districts did not assist the railways as much as they might in providing for the tourist. They had all heard about the Giants' Causeway and the Syndicate. There was no doubt that the Syndicate had improved the place very much by adding to the attractions and cleaning it up, and though they charge sixpence there are more visitors, and it pays the Syndicate.

The Agricultural Department was doing good work trying to increase the agricultural produce of the country, so that we would not have to send to Holland and other countries for things we could get at home, and the railway companies were doing their part to help this work.

It was a great pity the author had written the last few lines of the paper. He had brought them along step by step in his paper, showing them how well the railways had done during the last century. Then he knocks it all aside and tells us that in the new century there is general depression all round. He did not think the author meant to convey all that. There might be a little depression, but he considered it was only temporary.

He believed when they had the Channel Tunnel between this country and England there would be a very great increase of prosperity to all the Irish railways.

Mr. W. H. Mills, Past-President, in seconding the motion, said it was astonishing the amount of information

Digitized by Google

the author had been able to compress into such a small space, as well as putting it in a concise, readable and understandable manner. He hoped some of the gentlemen who compiled blue books would follow the author's example. The author had told them of the great improvements that had been made in their permanent way, their stations and rolling stock, &c., but he had not alluded to any thanks they had received from the public. Perhaps he did not think it worth while to allude to them, or possibly they would come afterwards.

Mr. Wise had referred to the difficulty of getting the public in these out-of-the-way places to do anything for themselves in the way of improvements. A short time ago a deputation waited on his Board and asked them to subscribe to some improvement scheme. They wanted something like £150 or £200. The Board looked into the matter, and then told the deputation to open a subscription list in their town, and whatever amount they collected the railway company would give the same. After six weeks they brought their list of subscriptions, and all they had managed to collect was £6 8s. 6d.

The author had not mentioned anything about the cost of travelling on the railways of the Continent or America. It would be very useful if the author could give them some comparisons between the passenger fares of America, Switzerland, Belgium, and Holland, and those of England, Scotland and Ireland, and especially now when we are using our best endeavours to induce tourists to visit Ireland.

Mr. J. Ormsby Lawder said he did not agree with the statement that the emigration population affected the railways. The people who emigrated did not patronise railways to any extent. The author had also included the tourist traffic, which during the last few years had been very large.

Digitized by Google

The tourist does not come into our population; therefore he thought the population basis was not the correct one to go on. With regard to the increase of rolling stock, no doubt there had been an increase, but in his opinion the railway companies required much more rolling stock than they had at present. It would be a great advantage in many places where large fairs were held if the traders and dealers were able to get their live stock away quickly. He considered that the railways were not able to meet the demands at these places.

The author had said that the Irish railways had improved, and no doubt they had. But to say that the Irish railways had the advantage of the railways in England and Scotland was, he feared, not a correct statement. People who had travelled in England or Scotland to any considerable extent would all know that the facilities in England and Scotland were very much greater than those in Ireland.

In comparing the traffic of the different countries they must remember that in England and Scotland the bottle was very nearly full; there was not much room for increase; but in Ireland the bottle had got a good deal of room left for increased traffic.

With reference to the parcels traffic, he must say that the recent development in the parcels traffic was of the greatest advantage to the public in Ireland. He considered it would be a great advantage if the railways in Dublin were to institute a central collecting house for all the railways, and to include collecting and delivering in the city without extra charge, as in London and other cities.

The increase in the live stock traffic was, of course, greater in Ireland than in Scotland or England, chiefly because, as the author had said, live stock was practically the only industry in this country. In England and Scot-

Digitized by Google

land they keep their cattle at home, because they require them. But in Ireland we do not require them, so we have to send them away.

With regard to the carriage of live stock by the railways, there was room for very considerable improvement in the construction of the wagons. They should all have spring buffers and tight couplings, and should be covered. From a number of experiments he had made for several years he found that cattle under existing conditions lost from 5 to 7 per cent. in weight on a journey of 80 to 100 miles to Dublin, and 10 per cent. going to England, which was a very serious loss to the farmer. The rates for cattle were much too high.

The total receipts on page 14 show that Ireland is very much behind England and Scotland in the percentages. True, Ireland had made great strides, but there was room for more improvement. He considered one way of increasing the traffic would be to cheapen the fares. In Scotland they could get a return ticket which would last them twelve months, whereas a month was the maximum in this country. In other countries the fare was ¾d. a mile third class, but in Ireland it was 1d.

His theory was, with regard to the passenger traffic, that the more passengers you carry on any railway the more trade will follow. So if you lower your rates and increase your passengers, your passengers will increase your trade.

Mr. R. O'Brien Smyth said he had just returned from a tour in America, where he found the check system was worked very satisfactorily with regard to your luggage. When you landed there you gave up your luggage and got a check ticket. You had no further bother about it, and you found it was delivered at the hotel before you got there yourself. This was a great convenience and im-

Digitized by Google

provement on the system at Holyhead or Westland-row, where luggage was thrown out on the platform for anybody to claim it or take it away. In America you had none of this trouble. The railway company took all the responsibility and delivered your baggage at the hotel free of charge.

Mr. J. H. Moore said in comparing Irish and English railways some people made no allowance for local circumstances. They would compare an express service with a service such as Dublin to Athboy, which was not fair, as there were only small villages served by the trains on these lines.

His experience was that the Irish railways were more liberal, especially in the matter of third class return tickets. Also that they treated cyclists better than the English or Scotch railways. But he considered the Irish passenger fares in general were too high.

Mr. Manning said if the passenger rates were reduced the traffic would be increased just in the same way that the cheapening of the postage rates increased the numbers of letters sent.

Mr. James Dillon said, with reference to the extension of the return tickets for longer periods, that this would be a great advantage to many people, for it would give more time to if possible include two or more business or pleasure engagements during a return journey that if limited to one engagement might cause the trip to be abandoned.

With regard to the American check system for parcels and baggage, he did not consider it applicable to this country. In America the travelling trunks were nearly as large as a coffin, generally one to each passenger, and as they had not adopted these large boxes yet throughout the British Empire the English required a larger number

Digitized by Google

of trunks, &c., involving more labour, and, therefore, he considered it would be too tedious and laborious dealing with so many numbers for small parcels.

He had not a very high opinion of the American check system, for his experience of it was not very satisfactory. When coming from 'Frisco to Chicago some time ago, he broke his journey at Chicago and had to change his tickets. During this operation—luckily for himself—he happened to look at his luggage, and saw the official in the act of putting his new tickets on to somebody else's luggage, and the wrong tickets on his own. So that only he happened to be present and saw the mistake in time his luggage might have gone on to goodness knows where—perhaps to China.

He considered it was not suitable for this country; therefore he would not recommend the author to adopt it, as the total number of boxes, parcels, &c., carried by each English traveller is enormously in excess of the number carried by Americans as a rule, thus entailing greater loss of time and labour.

Mr. Purcell said that notwithstanding all that had been said regarding the railways in this country he did not consider they were anything like as far behind those of England as their detractors endeavoured to make out. He (Mr. Purcell) could mention many in England and Scotland that were worse than anything in Ireland. There was one example familiar to them all—an example than which we had nothing to touch. Need he mention the South Eastern? There was one thing they were certainly behind in—that was the appearances of some of the stations here as against those in England. He also said visitors had remarked to him one thing: that was, the difference between the incivility to be met with in a number of places here from the station hands, porters, &c.,

Digitized by Google

and the civility they received at the other side of the Channel.

Mr. Charles Smith, Secretary of the Irish Railway Clearing House, said as an Englishman, resident in Ireland for the last five years, he must entirely refute the statement made by the last speaker with regard to the civility of the Irish railway officials. He had travelled many thousand miles a year during his life, and his experience was that the Irish railway servant did his level best to give you every information in his power, and would take any amount of trouble to find out anything you asked him. His experience of the English railway servant was rather in the opposite direction. With reference to the service of trains in Ireland he considered, taking the comparatively small number of passengers resident in the suburbs of Dublin with the very large number resident in the suburbs of London, that the Dublin, Wicklow, and Wexford Railway Company gave a better service than the London companies.

Mr. Anderson said he had a good deal of experience of Irish railway officials, and it was a libel to charge them as a body with incivility. In every large body of men they would find some who are not what they should be. But, taking them generally, he thought they would compare favourably with any body of railway men.

The President (Mr. Glover) said he was sure they were all pleased to hear of the great progress that the Irish railways had made during the last ten years. He had no idea that they had developed so much.

There was only one sad thing in the paper, and that was the diminution of the population of the country. It was a mistake to imagine that the emigrant class did not affect the railway traffic. Every place a human being lives he produces traffic. The loss of so many people to this country

Digitized by Google

is a melancholy thing. Certainly, if anything had helped to stop the tide of emigration it was the action of those who were managing the Irish railways.

He could not understand why the railways would not issue periodical tickets to third class passengers. He considered the third class passengers were entitled to them.

He regretted to hear that it was open to argument that the Balfour lines had benefited the shareholders, because they all looked for the salvation of Ireland to the extension of these railways, and now they were told that they did not pay. He hoped time would prove otherwise. It was to the railways they must look for the means of bringing their products of butter and eggs, &c., to the markets, and enable them to fight the enemy.

The question of improving the wagons for the conveyance of cattle was very important, for it was a very serious matter to lose 10 per cent. of cattle and horse flesh.

He believed there was no place in the world where they would find more civil railway officials, from the highest to the lowest, than they would find in Ireland.

Mr. Tatlow, in reply, said with reference to the remarks that had been made about the decrease of population not affecting the railways, he did not think it was necessary for him to add anything to what had been said by the President, as he entirely concurred in his remarks.

The tourist traffic had been alluded to by several of the speakers, and one gentleman had said the tourist should not be taken into consideration, as tourists did not belong to the population. But they must remember that the tourist traffic in Ireland was as yet comparatively small compared with the tourist traffic of England and Scotland, and did not appreciably affect the figures which he had given.

He regretted very much that he could not close his paper with a brighter sentence than he had, but they must

Digitized by Google

recognise that during this present year there had been a serious decline in most of the items of railway business. There had been a very large decrease in the exportation of cattle, horses and sheep.

With reference to the comparison of their passenger fares with the railways on the Continent and America, of course the subject was an interesting one, but as most of the Continental railways were more or less subsidised by their Governments the comparison was not a fair one. He could only compare Ireland with England and Scotland.

Mr. Lawder had drawn attention to the question of more rolling stock being required on the Irish railways. Now, with regard to the passenger stock he maintained that the present passenger stock could carry double the amount of traffic, and that Ireland was well off in that respect; also that the supply of locomotives and wagons had very considerably increased in the period under review.

With reference to vehicles for the carriage of live stock, the railways were making considerable improvement, carrying out most of the recommendations which had been suggested by the very influential Special Commission which had lately investigated the question of the carriage of live stock on the Irish railways. They had provided spring buffers, covered and well-ventilated wagons, and were constantly making improvements.

With regard to the deterioration of live stock, there was, of course, a certain unavoidable amount of injury suffered by live stock in transit, but it had been proved to demonstration that the bulk of the injury to the cattle does not occur during the railway journey, but from the rough treatment they suffered before and after transit, being made to walk for very long distances, and receiving abuse from the drovers. Steps had been taken to remedy this,

Digitized by Google

as far as possible, by the companies, the Cattle Traders' Society, and the police, with satisfactory results.

The passenger fares had been attended to, and this was a subject that came home to everybody. In comparing the return fares of England and Ireland they must remember that in England the return fares usually meant the sum of two single fares, whereas in Ireland the return fares were a considerable reduction upon two single fares. The advantage was, therefore, not altogether with England.

With reference to the American check system regarding luggage, it had been tried on the Great Eastern Railway of England, and proved a signal failure. He thought it would hardly suit on some of our railways, where the passengers arrive at the station only a very few minutes before the train is due to leave. He did not think the passengers would care for the delay occasioned by the American system.

With regard to the charge of incivility of the Irish railway officials, he had a very long personal experience among them, and very rarely heard a complaint from anyone of incivility. He thought the charge was not merited, and believed that Irish railway officials were on the whole more civil than any railway servants throughout Europe. He did not speak without experience, as he had travelled on most of the European railways.

There was a popular notion which contained serious fallacies, and that was that if they reduced their fares by one-half they would increase their traffic three or four fold. This was pure assumption, and not, in his opinion, sensible or reasonable assumption.

With reference to the Balfour lines, whilst undoubtedly these lines were a great benefit to the community, he had hazarded a conjecture whether they were a benefit to the

Digitized by Google

shareholder as yet. But he believed ultimately they would be a benefit to the shareholder as well as the community, upon which they had showered such large blessings.

In conclusion, he thanked the meeting for the very frank and friendly criticisms bestowed upon his paper, and for the appreciative hearing which had been accorded to him. He also thanked the President for his kind remarks.

Digitized by Google

[8th January, 1902].

MR. JOHN H. RYAN, President, in the Chair.

The following Candidates were balloted for and duly elected :—

MAJOR ANDREW BAIN, R.E., as Member; Mr. HENRY THOMAS TAYLOR, as Associate Member; and Messrs. HENRY WARING, ALEXANDER HOLLYWOOD, and ALFRED J. CALLAGHAN, LL.D., as Associates.

THE SUPPLY OF ELECTRICAL ENERGY IN CITIES.

By MARK RUDDLE, Member.

ONE of the most striking features of the latter half of the 19th Century has been the immense and universal development of the Engineering profession, due mainly to the ever-increasing necessity for improving the methods whereby the energy already existing in Nature, in a more or less inconvenient form, may be transformed, transmitted, and applied to the varied requirements of mankind, and the closing decade has been specially marked by the rapid strides made in that section dealing with electrical energy in its varied applications.

One reason, no doubt, for this rapid growth of the latter is that in the form of the Electric Telegraph, the Telephone, and Electric Lighting, it has come directly under the notice of large masses of the public, to whose individual comfort and convenience a forcible appeal was made from the very first.

Its latest and most important phase has been the establishment of large power stations in the majority of our cities and towns, for the production and distribution of electrical energy over the inhabited area for the purposes of lighting, motive power, and traction, and in the short

Digitized by Google

space of ten years some £25,000,000 has been thus invested in the United Kingdom alone.

The reason for this is that obviously, quantity for quantity, it is more economical to produce energy in a form available for general use on a large scale than upon a small, provided that the efficiency of transmission to the point at which it is utilised is not less than the saving effected by concentration of the plant.

In generating power by steam-engines and boilers the advantages of being able to use large units of plant effecting economy in first cost, in fuel, and in superintendence, are strong reasons for concentrating plant in a single station where coal can be delivered cheaply, and arrangements can be adopted to secure economies in working which would be too costly, or too complicated, to apply to small plants, which are further hampered by having to generate power in the variable quantities and at the irregular times at which it is wanted for many purposes.

Just as it has become necessary to supersede private systems of water supply, just as it has proved convenient to distribute coal gas, and necessary to establish a general system of drainage, so it has become convenient and necessary to provide in towns of any importance a system of distributing electrical energy which can be utilised by the inhabitants for lighting, heating, or motive power at their demand at any hour, and the more universal this demand becomes, and the more numerous and varied the purposes to which it is applied, the cheaper will be the cost at which it can be delivered to the consumer.

The establishment of these power stations is opening up possibilities, the full effect of which it is difficult to estimate. Electric lighting is daily increasing in popular favour, owing to its many advantages, and with the economies and improvements, which must come with time, bids fair to become the universal illuminant both indoor

Digitized by Google

and out. Important as this is, the adoption of electrically-driven motors for the supersession of small steam and gas engines is rapidly coming to the front. Where each small user of power is obliged to have his own engine and boiler, a skilled attendant must be employed for the purpose, but where the power is supplied electrically no skilled labour is required, as beyond occasionally oiling the bearings, and turning a switch to start or stop the motor, no attention need be given. There is the further advantage that the space occupied by the motor is insignificant in comparison with that required by the engine, boiler, coal store, and water tanks, to say nothing of the increased cleanliness, freedom from noise, heat, and danger of explosion, the higher economy attained over a large range of load, and the fact that when not in use no energy is being uselessly dissipated by the motor.

The necessity for the establishment of these large power stations being once recognised, it soon became a question of keen competition between company promoters and local authorities as to which should exploit this new field. Upon this debatable question the Lord Provost of Glasgow made a very fair claim for municipalities some time back, when he defined the conditions necessary to render an industry a proper one for them to take up—namely, that it must be monopolistic in its nature; it must be a necessity for the inhabitants of the district, and must cause interference with the streets. This definition, while allowing to municipalities a wide field for enterprise, effectually protects them from the charge of competing with local ratepayers, if they confine themselves to the employment of plant manufactured by private companies or persons for the supply of public necessities, and do not themselves enter the manufacturing arena.

It is undeniable from the published records of under-

Digitized by Google

takings managed both by municipalities and public companies, that both can secure excellent results, and that both may produce failures, and that it entirely depends upon the ability and integrity of those who have the direction of the operations of the undertaking as to the measure of success that will result. Given continuity of policy by a committee of able business men, who are content not to interfere in technical matters, and a competent engineer, there appears to be no reason why a municipality should not distribute electrical energy in its district at a cheaper rate than a company. It has undoubted advantages as to the terms upon which it can obtain money, it can deal in the open market for its plant, and though possibly paying a slightly higher price in some cases than that at which a company could purchase, in the long run it is a benefit not to feel tied to any particular manufacturer, who may be intimately associated with the financial backing of a company in this work.

Many points have to be taken into consideration before a final selection can be made of the most suitable system of generation and distribution for any given area, the most important being the possession of a suitable site with facilities for delivery of coal, and an abundant supply of water for condensing purposes. At one time it was considered important that the generating station should be in the approximate centre of the area to be served, and other advantages were sacrificed to secure this end. Recent progress in high-tension transmission has greatly modified this view, and it is now no longer considered necessary or expedient to have the generating station in such a position that future extension is often impossible, and where serious nuisance must be caused by a station of any size from smoke and vibration. Other points to be regarded are the nature of the demand in the area, whether it is principally residential, with few manufactories, or a busy

Digitized by Google

industrial centre, where motive power will be mainly required, or whether it is a combination of both. The question of a supply to electric tramways has also to be considered, if it has not already been anticipated by some enterprising company.

In the pioneer work of ten years ago there was practically no choice between continuous current at a pressure of about 100 volts to serve small areas with a dense demand and single-phase alternating current distributed over large areas at a pressure of about 2,000 volts, and converted in each consumer's premises to the usual one of 100 volts. Neither of these systems proved satisfactory in time as the demand grew. Even though continuous-current systems gradually adopted higher pressures and multiple-wire distribution, their extensions had to be met by the establishment of additional generating stations as the area of supply increased, while alternating-current stations reached a limit at which it no longer proved economical to instal small isolated transformers, and it became necessary to lay down low-tension distributing mains over the whole area, and to feed these from sub-stations in which were grouped large size transformers of more efficient type. These improved methods of supply only partially fulfilled the rapidly increasing requirements of the public, and so universal is the demand for electrical energy for all purposes that it is recognised as imperative that all future supplies for large cities must be generated in a station so situated that its plant capacity can be extended indefinitely, so as to cope with all possible future demands, and that if a suitable site cannot be obtained within the area of demand it must of necessity be located on the outskirts.

An ex-mural station, however, entails the laying of expensive and unproductive trunk mains to reach the area served, and in the case of continuous-currents would prove

Digitized by Google

almost prohibitive at all reasonable pressures. In the case of single-phase alternating-current supplies the cost of mains and loss in transmission permit of this being done upon a commercially satisfactory basis, but it was not so well adapted to the full development of motive power supplies as continuous-current, owing to the backward state of the designing of single-phase motors of high periodicity, and for some time it was considered possible that while the generation and transmission of large quantities of electrical energy would have to be by single-phase alternating-current the distribution would be by a continuous-current network, fed from motor-generators grouped in sub-stations, which would transform the high-pressure alternating-current into low-pressure continuous-current in a three-wire distributing system, having a pressure of 500 volts between the outside wires, and this has, in fact, been done in some cases where electric tramways had to be considered. On the Continent, however, the great advantages of polyphase currents have been turned to account for both transmission and distribution, and recent improvements in the manufacture of generators and motors enable the supply to be given with all the facilities that continuous-current supply can claim, the one disadvantage that it cannot yet be directly utilised for electrolytic work being offset by the fact that it cannot cause corrosion of gas or water pipes by any accidental leakage that may occur. The general practice now is to generate three-phase currents at a pressure varying from 3,000 volts to 10,000 volts, as circumstances may require, and to transmit at that pressure to sub-stations distributed over the area, in positions suitable to the ascertained or estimated demand, and there transform down by static converters to a distribution pressure ranging from 120 volts to 350 volts for both lighting and power purposes, and though the

Digitized by Google

supply for electric traction is at present required to be continuous-current, this is met by providing motor-generators in one or more sub-stations, which convert the high-tension three-phase supply into continuous-current at or about 500 volts pressure, and this, in time, with improved appliances and experience may possibly be rendered unnecessary.

The site having been selected, and the general lines of the system of generation and distribution decided upon, the plans of the generating station have to be drawn up. The buildings generally are of plain brick, architectural embellishments in such work being subordinated to low capital expenditure. Internally it is a wise economy to face the walls with glazed brick, as the improved appearance is accompanied by the solid engineering advantages that the walls can easily be kept clean at the minimum of expense, and can give off no dust, thereby avoiding a fruitful source of breakdown and damage to running plant. One point above all must be constantly kept in mind—the station must be absolutely fire-proof; the ultimate damage caused by fire in a generating station is far-reaching beyond the capital value of the plant destroyed. This latter can easily be covered by insurance in the ordinary way, but the loss not only of revenue, but of the certainty and reliability of the supply is often almost irretrievable, and may cause the collapse of the undertaking in the case of competitive supplies. The roof should have special attention paid to it, not only from the fire point of view, but also from leakage of water or drip from condensation. The latter can be guarded against by efficient ventilation, and the former by careful design and construction, especially where glazed lights are placed over the high-tension generators.

Two chimneys, at least, should be provided in stations

Digitized by Google

over 10,000 h.-p., and should certainly be of brick, as, though more costly to erect than iron chimneys, their upkeep is practically nothing, and special attention should be given to the arrangements for removing the accumulation of ash from the bottom of the chimney and flues without causing any stoppage of work. Ample provision should be made for admission of air to the boiler-house so as to avoid the strong draughts which result when access is cramped.

The relative positions of the engine and boiler-houses should be such that the length of steam-pipe interposed between the engines and boilers will be reduced to the minimum, so as to avoid the heavy losses by condensation which are specially manifest during the hours of light load. Much of this condensation loss can be avoided by superheating to a suitable degree, with consequent increased saving of coal at all times due to the lessened quantity of steam required.

The choice of boiler lies between the various modifications of the Lancashire and water-tube types, and the selection mainly depends upon the size of the station and the steam pressure proposed to be carried. The Lancashire boiler has long held the field for mill-work, where probably an output of 3,000 h.-p. would be the average maximum demand, but in the case of generating stations of the class we are considering, where the ultimate capacity will certainly range from 30,000 h.-p. upwards, the multiplication of units due to the manufacturing limit of 30 ft. by 8 ft. 6 in. of this type tends to the probable adoption of water-tube boilers, especially for pressures over 150 lbs. The floor space required for this type is less than one-half that of a Lancashire boiler of the same output, and they are being built to evaporate more than double the weight of water per hour of the largest size Lancashire boiler

Digitized by Google

commercially available. Their efficiencies are fairly equal, their maintenance is less, their ultimate life greater, and their steam-raising more rapid, but they require to be fed with good water. Under careless stoking they have a tendency to give wet steam, but this can be easily remedied by the use of super-heaters.

It is an open question whether hand or mechanical stoking is the better for our purpose. With dear fuel and careful stokers hand-firing runs mechanical very close, when taking into consideration the first cost and maintenance of the latter, but with a cheap class of fuel available, the advantage certainly lies with mechanical stoking, when the diminished number of skilled stokers is taken into consideration.

Mechanical coal-handling arrangements are an obvious necessity in a systematically organised station, where every economy of labour must be carefully studied. There are many efficient types now in use from which a suitable selection can be made to fulfil the local requirements.

Special attention should be given to the character of the water with which the boilers are fed, and a careful analysis of its composition will greatly assist in deciding upon the means to be adopted to avoid injurious action on the boilers, whether from corrosion or formation of scale. In the former case the life of the boilers would be rapidly reduced, and the formation of scale causes a heavy increase in the coal-bill, as well as a continual expense in cleaning. It only needs a thin film of scale to lessen the efficiency of evaporation by 10 per cent., and in the use of some town supplies a deposit of $\frac{1}{4}$ inch in four weeks steaming is not unusual. It is obvious that outlay on purifying-plant should not be stinted where unsuitable water is alone obtainable. In the use of condensed water for boiler-feeding the presence of oil should be carefully guarded against,

Digitized by Google

and the filters should be in duplicate and of ample capacity.

With the advent of high pressures and superheating steam-pipes of cast-iron or copper are now out of the question, and mild steel pipes with the joint riveted or welded are the most modern practice; in large pipes the flanges should be fixed in the same manner, and in smaller sizes they may be screwed on and expanded, but in all cases the flanges must be accurately faced and jointed most carefully. Full provision must be made for expansion and contraction wherever such may possibly occur, so that unnatural strains should not be thrown on the joints, as this forms a fruitful source of breakdown. In the early stations it was considered necessary to arrange the steam mains either in a ring or to have them in duplicate, thus immensely increasing condensation losses. Subsequent experience in large modern stations has shown this to be unnecessary, and with a suitable arrangement of isolating valves, and a range constructed as carefully as either engine or boiler, a single steam range is practically the most effective.

Duplicate feed-pipes to boilers are an absolute necessity, and the use of electrically-driven pumps tends to reduce the constant losses due to the wasteful character of the steam-pumps in common use, which take anything from 45 to 100 lbs. of steam per h.-p. hour; in case steam-driven pumps should be used, the cylinders should be compound and fitted with condenser.

It may be suggested that I am dealing at unnecessary length with points of detail which are a matter-of-course in all high-class engineering work, but in practice it is frequently found that such details as joints in steam-ranges are left to the discretion of the contractor's workmen, who are apt to think that a joint is perfect so long as

Digitized by Google

the flanges are bolted together and the joint does not leak noticeably when steam is first turned on. The working strength of a chain is that of its weakest link, and one of the weakest parts in the chain of electrical engineering work stretching from the coal-heap to the switch-board is certainly the steam range. As much care should be taken in erecting the range as in setting the engine, and the joints should be as carefully fitted as those of the cylinder covers, for the best equipped engine is useless if the steam supply fails and the plant has to be shut down at an inconvenient time, and the same rule applies to all the minor accessories, which should be carefully and thoroughly supervised during erection if future trouble is to be avoided.

The generating plant consists essentially of a prime mover for converting the steam into mechanical energy, coupled to a dynamo which converts the mechanical into electrical energy. The broad requirements for the engine are reliability, steady running, economy, accessibility of parts for examination and repair, and the minimum of attention while on the load. With the multitude of engines now on the market there is no difficulty in having these conditions fulfilled, and I will only touch upon some special points peculiar to electrical work. From the constantly varying nature of the load it is practically impossible to arrange the sizes of the units so as to ensure that each plant shall be run at or near full load. There is, therefore, nothing to be gained by adopting triple expansion engines in preference to compound, as the theoretical greater economy is, in such a case, practically non-existent, and it is, therefore, useless to be burdened with the extra capital cost and complication. Modern compound condensing engines using superheated steam will give on test a consumption of from 12 to 14 lbs. steam per

Digitized by Google

I.H.P., and will give a better average in ordinary running than triple-expansion. Vertical cylinder engines for large units have now become the standard type for plant running night and day, owing to economy of floor space, reduced wear on the cylinders, and better drainage secured. In some types the dynamo is placed in the centre between the high and low pressure cylinders for the sake of reducing the shaft stresses, as well as the number of bearings. Owing to the liability of damage to high-tension generators from leakage of water and oil, the more advisable plan is to couple the dynamo to one end of the shaft, thus leaving it freer from risk of damage, and enabling it to be more easily taken apart for cleaning or repair. In sets of 5,000 h.-p. it may not be possible to adopt this plan owing to the heavy stresses on the shaft due to the dynamos when running in parallel.

On the point of whether slow-revolution or quick-revolution engines should be selected for plants of under 500 h.-p. the balance of advantage is in favour of the standard makes of quick-revolution engines, but for a generating station of any size it is unlikely that units smaller than 1,000 h.-p. will ever be installed, and for this size and upwards, engines not exceeding 100 revolutions per minute are to be preferred, as reliable running on heavy loads and economy in repairs is more easily attained.

In connection with this I would point out that while it is obviously necessary to have reserve sets of plant in case of serious breakdown, it is of the greatest importance that each set should have in itself a good overload capacity, or, in other words, should have a large factor of safety. With large units running in parallel it sometimes happens that a dynamo breaks down in a few seconds, making it imperative to disconnect it at once without waiting to couple

Digitized by Google

on the spare set, and with a good overload capacity the remaining sets will be able to fairly maintain the supply while the spare set is being speeded up. The same applies if a sudden increase in load takes place, and gives the attendants a brief time to get the spare engine away.

The amount of cyclic irregularity, or the permissible variation of speed during one revolution is of great importance in the parallel running of large three-phase generating sets, and unless kept down to about ·25 per cent. will certainly cause constant trouble, and may be the source of serious disturbance in and damage to the distributing system. A well-designed fly-wheel will do much to ensure a minimum irregularity, but the steadiness most depends upon the design and adjustment of the governor. This must be capable of hand regulation over a good range with ease and certainty, and, while being sensitive to permanent changes in the load, must be carefully checked by a suitable dashpot from responding to slight quick changes caused by current oscillations and variations in the dynamos. The amount of the damping effect of the dashpots is easily controlled when oil dashpots are used, and can be adjusted to the required sensitiveness from time to time. It is, of course, needless to say that the governor must be capable of taking complete charge of the engine with the stop valve full open, in case the entire load is suddenly thrown off.

The steam turbine is now becoming a dangerous rival to the reciprocating engine, for units of 1,500 and 2,500 h.-p. have been put to practical work in Germany and America, and on test have shown the low consumption of 13·5 lbs. of steam per I.H.P., running condensing, and with superheated steam. Whether they will ever replace the older type remains to be seen, as much depends upon their maintenance expenses and reliability. Their low first cost,

Digitized by Google

small floor space, fewness of parts, and practical freedom from vibration are strong points in their favour.

The accepted type of polyphase generator is that of fixed armature and revolving field, which enables the parts carrying high-tension currents to be thoroughly insulated and fixed in such a position that all possibility of danger to the attendants from accidental contact is entirely removed. Special attention must be paid to the arrangements for exciting the field-magnets, and whether this be effected by a separate exciter attached to each generator, or from a special exciting plant common to all the sets, it is most necessary to have an alternative source available, such as a battery of accumulators, which can be instantly switched on if the ordinary excitation fails.

The main switch-board is one of the most important points in the whole system, as it is there that the entire electrical energy is received from the generating plant and distributed into the system of mains supplying the area served. Should any accident incapacitate this switch-board the whole supply is interrupted, while if a generating set break down, or a fault occurs on the distributing cables, the effect is only local and does not disturb the general supply. It follows that special care must be exercised in the design and construction of the component parts that the whole may be absolutely fire-proof, not only against ordinary causes, but also from arcs set up accidentally in the operation of the switch-gear, or the action of the safety devices during emergencies. It must be so designed that it is absolutely safe to operate, and that cleaning and repairs may be effected without stopping the supply, or causing risk to the attendants from accidental contact with parts carrying high-tension currents. Some of the early stations were furnished with switch-boards composed of slate or marble panels fixed on wooden fram-

Digitized by Google

ing (and often on wood floors), and serious fires causing complete destruction of generating stations resulted from this arrangement. Recent practice has provided eminently safe and satisfactory switch-boards and gear, but the position in which they are fixed is often cramped, and when rubber covered connecting cables are used the risk of fire is not entirely removed, although its possible damage is greatly reduced. The usual position for the switch-board is upon an elevated platform in the engine-room, which enables the regulation of the generating plant to be kept under easy control, but wherever possible it should be placed in a separate building to escape the risk of damage from burst steam or water pipes, either of which might seriously affect the prompt manipulation of the switch-gear in an emergency, and by means of suitable signalling arrangements effective control can be exercised from a more secure place.

In the transforming sub-stations the electrical energy from the generating station is received at high-pressure of 5,000 or 10,000 volts, and converted to a lower pressure for feeding the distributing network at various points throughout the area. Where the distributing mains are fed with polyphase current static transformers alone are necessary, but where it is desired to give a continuous current supply either rotary converters or motor-generators are used, and the stations then require the presence of one or more attendants to control the moving machinery. As these sub-stations often contain plant capable of dealing with 500 and 1,000 electrical horse-power, it is necessary that their construction should be equally fire and water-proof with the generating station. They should be placed above ground in all instances possible, as it is extremely difficult to render them damp-proof when under-ground, and they are always liable to be flooded during storms,

Digitized by Google

when interruption of the supply nearly always ensues. Ventilation is very difficult to secure, and they are more inaccessible to the attendants when so placed. The switchboards and gear should be equally fire-proof and safe to handle, as they cannot be kept under as skilled supervision as plant in the generating station, and telephonic communication should be provided in all cases.

The system of mains, comprising feeders and distributors, may be divided broadly into two classes—either the cables may be drawn into conduits or pipes to protect them from mechanical damage, or they may be laid in protective troughing and the intervening space filled in with some bituminous compound, a variation of the latter plan being to armour the cable itself with metal strips or wires, and lay it direct in the ground. Both methods have advantages and drawbacks; the drawing-in system is convenient when it is desired to substitute a larger cable for one which has reached its full carrying capacity, or when it should be necessary to replace a damaged or faulty section. But the insulating covering of the cable is liable to deterioration from the chemical action of the various gases due to leakage from the soil and the confined damp air which is always present in underground pipes, and though improvements in the manufacture of cables have greatly lessened the liability to decay, the system is now almost entirely confined to feeder-cables, for which purpose, under certain circumstances, it has great advantages. The second, or "solid system," as it is usually termed, has the one disadvantage that when once laid it cannot be renewed or supplemented without opening the ground for the entire length affected, which is necessarily a slow and costly undertaking. On the other hand, the cable when once properly laid in iron troughing, the intervening space properly filled with bitumen, and closed with an iron lid

Digitized by Google

or cover, it is practically proof against accidental chemical decay, and only liable to be damaged by extremely careless workmen when making excavations for other purposes.

With all systems of mains it is necessary to have certain disconnecting or joint boxes where the cables may be divided up into convenient length for testing and other purposes, and they are usually placed at the intersection of streets where the different cables meet or branch off. Their principal requirement is that the means of disconnecting should be simple, efficient, and reliable, and that the interior of the box should remain perfectly damp and water-proof at all times. The prevailing practice has been to place these boxes underground, from motives of economy, but their manipulation under such conditions is always troublesome and sometimes impossible in bad weather, and it is beginning to be appreciated that such disconnections can better be made in pillars fixed above ground, which can be safely operated under all conditions of weather. They are unfortunately more expensive when so arranged, but reliability of service is well purchased at the slightly increased cost. The connection of adjacent sub-station networks should in any case be made in such overground pillars.

The cables themselves consist essentially of a copper conductor or conductors insulated with either a solid or composite di-electric, one of the most satisfactory materials for the former class of insulation being vulcanised bitumen. This material, unlike vulcanised rubber, undergoes its chemical treatment previous to being moulded round the conductor, and is effectually consolidated and made water-proof during the latter process. It is practically inert from a chemical point of view, and has proved

Digitized by Google

in use to be exceedingly durable either when drawn into pipes, or, as is more usually the case, laid on the solid system.

The second class of insulation consists of a solid fibrous material, impregnated with an insulating oil, and enclosed in a water-proof envelope of lead. An extremely satisfactory cable of this class is that in which the conductor is wound round with layers of paper in narrow strips, each layer breaking joint with that underneath. The paper itself, when dry, is an excellent insulator, and the subsequent impregnation with resin oil greatly increases its effectiveness. As this class of cable is more or less hygroscopic, the permanent exclusion of moisture necessitates their being encased in lead, and during the operations of laying and jointing the greatest care has to be exercised, not only to keep them perfectly dry, but to ensure that no pinhole is left in the lead covering whereby moisture may afterwards creep in.

The commercial success of an undertaking of this kind mainly depends upon the following three points:—

(1.) Station efficiency—The generating plant must be that best suited to the work in view, and must be operated with the greatest economy.

(2) Distribution efficiency—The distribution of the energy generated must be effected with the least possible loss in transmission, and with the utmost amount of reliability and constancy of service.

(3) The load-factor (or the relation which the actual output of the plant bears to what would be its output if it were worked continuously day and night at its full load) must be high.

The first two points are mainly engineering ones, the last is more a commercial one, as it is largely influenced

Digitized by Google

by the tariff of charges adopted. It is evident that the only equitable tariff is that in which the charges to all classes of consumers follow approximately the cost of supplying them individually, so that an equal rate of profit may be obtained from all.

The cost of production may be divided broadly into two parts—First, the stand-by charges, or cost of keeping the entire installation ready to supply energy as demanded; Second, the production or running cost, which includes all expense incurred in continuing to produce and deliver energy to the consumer after all has been got ready.

The first includes wages, coal, oil, and stores used getting up steam and keeping the plant ready, repairs and maintenance, management expenses, rent, rates and taxes, insurance, and capital charges for interest and redemption. It is proportional to the maximum simultaneous demand of the consumers, and in round figures represents 80 per cent. of the cost of production. The second includes the cost of coal used in actually producing the energy, with the cost of extra oil and maintenance due to the greater length of time the plant is in use; it is proportional to the number of hours the lamps are in use, and may be taken to represent the remaining 20 per cent. of the cost. From this it is evident that after the plant has been in use for a sufficient time to cover the standing, or out-of-pocket, expenses, the cost of any further production of energy is reduced to a very low figure, and it follows that a consumer who only uses his demand for such a short period daily that he barely recoups the standing charges, must cost more to supply than one who extends his use over a longer period, and must consequently pay a higher price per unit.

To take a concrete example from one of the most success-

Digitized by Google

ful stations now in operation, the cost of production for varying hours' use per day is as follows:—

Time used	Cost	Load-factor	Rate of Charge
½ hour	12 pence	—	—
1 „	7 „	4 per cent.	7 pence
2 hours	3·8 „	8 „	4 „
3 „	2·76 „	12 „	3 „
4 „	2·2 „	16 „	2·5 „
5 „	1·88 „	20·5 „	2·2 „
6 „	1·66 „	25 „	2 „
7 „	1·5 „	29 „	1·85 „
8 „	1·4 „	33·5 „	1·74 „
9 „	1·3 „	37·5 „	1·66 „
10 „	1·22 „	42 „	1·6 „

This shows how rapidly the cost of production falls as the period lengthens over which the maximum demand of the consumer is used. The tariff in use at this station is arranged thus:—For the first hour's use per day of the consumer's maximum demand the charge is 7d. per unit, and all units used beyond this amount are charged at 1d. per unit, and, as will be seen above, the resultant price paid by the consumer follows almost exactly the same curve as the cost of production, though slightly higher at the end of the scale to give a small profit. The question of charges is extremely interesting, and requires very careful consideration, but time will not permit me to pursue it further.

Having now indicated the principal features of an installation for the general supply of electrical energy, I

Digitized by Google

will conclude with a brief description of the steps taken to meet the requirements of the City of Dublin.

The Corporation of Dublin was early in the field in recognising the importance of the general distribution of electrical energy, and in the autumn of 1892 its pioneer station was giving a supply to the principal business part of the city, the capacity of the plant being arranged to supply energy to 10,000 lamps of 8 c.-p. alight at one time for the use of private consumers, and to 81 arc lamps for lighting the principal streets, the total cost of the initial installation being £30,000. The system adopted for private lighting was that of high-pressure single-phase alternating-current mains at 2,000 volts, feeding isolated transformers in each consumer's premises, which reduced the pressure to 100 volts at the meter for the consumer's use.

Applications for supplies came in so rapidly that in 1893 the plant and street mains had to be extended, and this expansion continued until the entire area of the site available was filled up to the capacity of 30,000 8 c.-p. lamps, at which it now stands.

The financial results of the undertaking showed a steady progressive profit from the start, and in the year 1897, after paying back the usual annual instalment of principal of loans amounting to £2,437, and interest on the outstanding balance of loans amounting to £1,662, there remained a net surplus of £955 available for any purpose. Unfortunately, about this time some serious failures of the street cables occurred, which had the effect of checking for a time the continuance of this success. These cables were of the best class obtainable at the time the station was designed, and had been largely adopted by other undertakings. Upon careful examination it was found that the rubber insulation of the cables was perishing by inherent

Digitized by Google

natural decay, and as the same faults had arisen in the other stations which used this class of cable, it became necessary to replace the entire system of distributing mains. Advantage was taken of this unfortunate necessity to bring the system up to date by removing the transformers from the individual consumers' premises and concentrating them in five sub-stations distributed about the area served, and supplying the consumers at low pressure from a network fed by these sub-stations, the standard pressure to consumers being raised at the same time from 100 volts to 200 volts.

This extensive reconstruction took some time to carry out, but was at work at the end of 1899, and the network of cables laid down by the contractors (Callender and Co.) has given entire satisfaction to the present time.

In the year 1899 the Corporation definitely decided, in view of the increasing demand for electrical energy in the city, to equip a new generating station which would be adequate for the comprehensive supply throughout the area, and to largely extend their system of mains, and accordingly instructed Mr. Robert Hammond to report upon the best means of carrying this into effect upon the most modern lines, utilising the existing system as far as possible, and fixing the site of the generating station at the Pigeon House Fort, which had been acquired in connection with the new main drainage work.

The consulting engineer sent in his report in December, 1899, and after long and exhaustive discussions and inquiries the scheme was finally settled, and the work put in hand on the following lines:—

The generating station at the Pigeon House Fort to contain plant capable of supplying 100,000 lamps of 8 c.-p. alight at one time, with suitable provision for reserve and extension, but as it was decided to increase the street

Digitized by Google

lighting to the total of 500 arc lamps, the amount available for private consumers was reduced to the total of 63,300 lamps in use at one time. The electrical energy to be generated by three-phase alternators at a pressure of 5,000 volts and a periodicity of 50, and transmitted at that pressure by underground trunk cables to a distributing station at Fleet-street, utilising part of the present generating station for that purpose. From this point the energy to be conveyed at the same pressure by separate feeding cables to 19 sub-stations situated in different parts of the city, where the pressure would be reduced to 200 volts for feeding the three-phase networks radiating therefrom. The sub-stations supplying the existing single-phase network to be divided into three groups, each fed by a single-phase transformer from the trunk main bus-bars at a pressure of 2,000 volts as at present, the periodicity being, of course, reduced from 83 to 50, but the pressure on the distributing mains to the consumers remaining at 200 volts.

The site selected at the Pigeon House Fort forms the N.-E. arm of the small harbour there, and the boiler-house is placed on the west side facing the wharf. The engine-house lies parallel between the boiler-house and the east boundary wall. The coal store is at the north end of the engine and boiler-houses, and the chimney is at the south end. This arrangement secures the minimum distance between the collier in the harbour and the coal store, and the minimum length of steam pipe between the boilers and the engines. The boiler-house measures 179 ft. by 53 ft., and the engine-house 179 ft. by 50 ft., the height of the latter to the crane-beams being 26 ft. 6 in. The arrangements for unloading, storing, and distributing the coal have been entrusted to Graham, Morton and Co., and can deal with 30 tons of coal per hour. The coal will be lifted from the vessel by a travelling steam-crane and grab, and

Digitized by Google

delivered into any of the five shoots spaced along the boiler-house front, which feed an endless gravity-bucket conveyor, travelling under the floor and passing into the coal store at the end, then rising and turning backward the coal is delivered into an automatic weighing-machine, the conveyor passing along into the boiler-house over the top of the hoppers feeding the mechanical stokers. The coal passes from the weighing-machine into the coal store conveyor, which discharges where required. The same conveyor also delivers coal from the store into the boiler-house conveyor when required to fill the hoppers there. When not engaged in unloading a vessel, the lower side of the boiler-house conveyor carries away the ashes and delivers into a hopper shoot arranged outside the boiler-house wall. The two conveyors will be driven by three-phase motors.

The boiler-house plant comprises six Lancashire boilers, each 30 ft. by 8 ft. 6 in., to evaporate 8,500 lbs. of water per hour, and are built to stand a working pressure of 200 lbs. per square inch; also four Babcock and Wilcox water-tube boilers, each to evaporate 10,000 lbs. of water per hour, and to work at the same pressure. Mechanical stokers driven by three-phase motors, and super-heaters are arranged for both types of boilers. Two sets of Green's economisers, each having 288 tubes, are provided, the mechanism being also motor-driven. The chimney will be of brick, and octagonal in form, 186 ft. in height from ground level, and 9 ft. internal diameter. The brick base, 20 ft. square, stands on a concrete foundation, 36 ft. by 36 ft. by 12 ft., the subsoil being consolidated by piles driven 24 ft. down.

The generating plant consists of two sets of 1,000 Kilo-watts each, and two sets of 500 Kilo-watts each, the engines in each case being compound condensing vertical type,

Digitized by Google

built by Duncan, Stewart & Co., of Glasgow, and coupled direct at the end of the shaft to three-phase alternators, built by the Oerlikon Machine Company of Zurich. The principal dimensions of the large engines are—cylinders, 28 in. by 58 in. by 48 in., at 84 revolutions per minute, the diameter of the fly-wheel being 18 ft. and its weight 40 tons. The smaller engines are 22 in. by 42 in. by 42 in., at 94 revolutions per minute, the diameter of fly-wheel being 14 ft. 6 in., and its weight 30 tons—the guaranteed steam consumption being 19 lbs. of steam per Kilo-watt-hour for the larger sets, and 21 lbs. for the smaller sets. The exciters are coupled direct to the end of the alternator shaft, and in case of accidental failure the exciting current can be taken from a storage battery, which also acts as a stand-by for the works lighting.

Two sets of surface condensers are provided, the circulating pumps being driven by electric motors, the intake pipe drawing water from the harbour being 30 in. diameter.

A 25-ton overhead travelling crane enables the engine-house plant to be handled as required.

The main switch-board is placed outside the line of the engine-house proper, although opening into and commanding a full view of same. The board is being built by Messrs. Ferranti, Ltd., who have made a special study of extra high-tension switch-gear with regard to safety in operation. Very complete test-rooms and offices have been provided, and a workshop with the necessary power-lathes and other machine tools for keeping the plant in working order, the whole being driven by three-phase motors.

The current generated here will be conveyed to Fleet-street distributing station by three trunk cables, supplied and laid by the British Insulated Wire Company, and will be their usual class for extra high-tension work, each

Digitized by Google

having three cores separately insulated by layers of impregnated paper, and then enclosed in drawn lead sheathing. The cables are then laid separately in cast-iron troughing, filled in with pitch compound, and covered with a cast-iron lid, and further protected by bricks or concrete slabs laid on top.

At Fleet-street will be placed the switch-boards for receiving the current from the trunk cables and distributing it to the present area and the 19 new sub-stations, these also being made by Messrs. Ferranti, and provision is made for driving the motor-generators for the public lighting. These consist of a three-phase 5,000 volt motor, coupled direct to a 1,000 volt continuous-current generator, two sets being used on the load and one set held in reserve, and the current will be distributed by 24 circuits to 500 10-ampère arc lamps fixed in the more important streets. The posts will be of ornamental design, with overhanging arms, from which the lamps will be suspended, and will be arranged with winch-gear for lowering the lamp to the street level for cleaning and trimming, thus avoiding the use of a cumbrous ladder, and enabling the trimmers to work in comfort. The lamps will be switched on in groups of 22 or 23, and the circuits so arranged that alternate lamps will be in different groups.

The new sub-stations will all be overground and of neat design, and will be fitted with Ferranti switch-gear. Complete telephonic communication will be provided between each sub-station and Fleet-street, and the latter will also be similarly connected with the generating station. From the sub-stations will radiate the 4-core distributing cables for supplying the consumers either with light at a pressure of 200 volts or with motive power at 340 volts, the 4-core arrangement enabling this to be done from the one cable at discretion, and thereby aiding the preservation of

Digitized by Google

balance in the circuits, and minimising the possible variation in pressure.

The distributing cables are of the same make as the trunk cables, and are being laid in the same way. Some 32 miles in all are being installed, as well as over 40 miles of cable for public lighting.

Such, briefly, is the installation now being laid down by the responsible engineers for the supply of electrical energy in Dublin, and when completed it only remains for the Corporation in its widest definition, comprising the Lord Mayor, Aldermen, and Burgesses of the City, to cordially co-operate with the citizens at large in developing the full capabilities of the new supply of energy that will then be at their doors, ready for use at a reasonable price, for the undertaking to be rendered self-supporting.

In developing the general use all can do something, for everyone requires some amount of artificial light in the evening. Its use need not be considered a monopoly of the rich only, for at the rate of charge that will be in operation the smallest shops and houses can obtain their light at a lower rate than gas, with the added benefit of a purer atmosphere. But a fair trial must be given to it, and its distribution must be on as liberal a scale as when gas is installed. It is not giving it a fair chance to instal the electric light in the windows alone of a shop, where its use is limited to an hour or so daily in the winter months, and have the rest of the shop, the dark passages and basement lighted by gas during long hours daily, and often throughout the year. If these long-hour gas lights are replaced by electric lamps, the total consumption can be had at a much lower rate than must of necessity be charged when the windows only are lighted, and it is certain that when electric light is used thoroughly under such con-

Digitized by Google

ditions its many advantages can be obtained at an annual cost which will not exceed the previous gas bill, and in many cases be much less.

Its economical advantages for motive power should appeal to many users, the small ventilating fan or dental lathe, the hair-brushing or meat-chopping machine, printing presses, and so on up to the largest lathes and machine tools, all can be driven by electric motors with a convenience and economy that cannot be otherwise secured.

It is sometimes asserted that continuous-currents are better suited for motor work than single or three-phase alternating currents. The best answer is the fact that in the largest Continental workshops, where continuous-current plant has been in use for years, the whole equipment is now being changed to three-phase, owing to the greater liability of the former to breakdown from trouble with commutators and armatures, and in most new factories the polyphase system entirely is installed for both lighting and power.

In isolated plants alone some 60,000 h.-p. has been recently installed for motive power on the Continent, all being three-phase; and in England during the last three years 16 plants, aggregating 10,000 h.-p., have been placed in workshops for all purposes. Some of the more prominent are—Richardsons, of Hartlepool; Bristol Carriage and Wagon Company, Beyer and Peacock, of Manchester; the Patent Shaft and Axle Company, Wednesbury, &c, dealing with all tools from the smallest to motors of over 50 h.-p., including foundry and general travelling cranes, the resultant saving in some cases being 40 per cent. in the total power required, that would otherwise be wasted in lines of shafting.

With such opportunities for universal application and

Digitized by Google

use by all classes of the citizens, there should be no reason to doubt the future success of the City of Dublin electricity supply.

THE PRESIDENT said the paper which they had just heard was somewhat different in scope and character to the papers which they had been accustomed to hear in the Institution. But it opened up a very large field of discussion, which he hoped would ensue. If any visitor wished to join in the discussion he was perfectly welcome.

He was sure they would all agree with him in offering a hearty vote of thanks to the author for his very interesting paper, also for the trouble he had taken in preparing the large diagrams which he had exhibited.

MR. PURCELL said they owed the author of the paper a deep debt of gratitude for the extremely lucid and clear manner in which he had placed before them the results of his knowledge of the latest up-to-date electrical appliances, and the requirements for the distribution of electricity throughout any large city. He was afraid the author had in one sense taken a little too much credit to the Corporation of Dublin as the pioneers of this work in this city. It was just exactly 21 years ago since the first electrical company in Ireland was started in Dublin. The station was erected in Whitehorse-lane, and Dawson-street was the first street lighted by the company. The company existed for a considerable time, and did a good deal of work. It was eventually bought up by the Gas Company. The Gas Company worked it from Fade-street, and finally put up a station in Hawkins'-street. In 1890 they had 15 miles of overhead wires. They found they could not allocate any money to carry out incandescent lighting, and as the Dublin Corporation were then applying for a Provisional Order for lighting powers the company retired, and from

Digitized by Google

that day the Corporation had dealt with this matter in Dublin in a very progressive manner.

There were a few points about which he would like to ask the author some questions.

The author had dealt with cities in general, but more particularly with the City of Dublin scheme. In that scheme he speaks about the position of the station. In one portion of the paper the author says it is an advantage to have the generating plant as near as possible to the distributing area, if you can get your condensing water and coal delivered cheaply.

Would the author be able to tell them what loss is sustained in energy in transmission owing to the distributing station being three miles distant from the Pigeon House generating station; also the extra cost of the scheme by reason of additional cables, maintenance, &c.?

With reference to the Pigeon House, he would like to ask how they were going to keep the damp out of it? His remembrance of it many years ago was that the soldiers were unable to keep their ammunition dry, and if this could not be kept dry, what was going to happen to the very expensive and delicate machinery which it was proposed to house in it? It was also proposed to put in a large amount of very heavy machinery. Now, he understood that the bank on which the Pigeon House was built was very shaky. How would it stand under the vibration? Was there no place nearer Dublin with the same facilities for water and coal that could be got?

The author also spoke with regard to the amount of power that would be used by the city. Now, Dublin has not many manufactories. Where were they going to use this power? How were they going to use it? Is it not a fact that in the cities abroad there is not a single one in which the three-phase system was used solely for lighting

Digitized by Google

purposes? In any city that he knew of the three-phase was used for power primarily, and for lighting secondarily—the lighting being practically a bye-product, and merely an adjunct to the power or day-load.

He understood that the present area will be under the same system of distribution, but in the general distribution they would have one portion of their area with one set of motors dealing with one-phase, and outside of that they would have the three-phase motors, and again two-phase motors. What were they going to do in the case of removals from one place to another? He would like to know would it not be possible to arrange them in some way so that the motors would be interchangeable through the different areas?

He thought it would not be big power motors that would be used most, but rather small power ones, and these would not be all three-phase, but various phases.

Mr. Whieldon said he would like to make a few remarks on the paper, but before doing so might he be allowed to answer a question put by the previous speaker, who inquired as to the name of a city in which a three-phase alternating system was at work continuously for general distribution purposes. He could inform him that such a system has been successfully at work for some time past in Milan, several villages in the vicinity being included in the installation, which included both lighting and power, the current being brought from a water-power generating station some 25 miles distant. They had in all about 3,000 electric motors connected to their mains.

Coming to the paper—On page 31 there was a paragraph which he begged to draw attention to, and which he thought would be understood by electrical engineers, but which might be confusing and misleading to commercial gentlemen present who were not so well acquainted with

Digitized by Google

the subject. Might he suggest that the following paragraph—"Provided the efficiency of transmission to the point at which it is utilised is not less than the saving effected by the concentration of the plant" would be more correctly rendered—Provided the loss of efficiency in transmission to the point at which it is utilised is not greater than the saving effected by the concentration of the plant.

With reference to the relative cost of up-keep of the Lancashire and water-tube boilers, his experience was that the latter was the most expensive. In a large station with which he had been connected, and where approximately 28 of these boilers were in use, on an average at least one tube had to be replaced per day.

If engineers present had had the trouble he had had on this account alone, he thought they would come to the same conclusion that he had done—that they were not the most desirable form of boiler for all purposes, notwithstanding their undoubted steaming qualities.

On the question of steam mains, he agreed with Mr. Ruddle that the greatest care should be exercised in obtaining the best of workmanship, and that the steam range was one of the most important links to be kept in order to prevent breakdown. But this being so, why have spare engines, machines, and boilers, and no provision in the way of spare steam pipes, which a ring main provided, the loss from condensation being trifling when compared with the advantages obtainable?—especially so with the use of superheated steam. In his own experience he had known great benefit to be obtained from the use of a ring main by the facilities it afforded for the repair of plant and prevention of serious breakdown.

There was a matter which the writer had not mentioned in his paper, but which he (the speaker) thought he should

Digitized by Google

mention as being of paramount importance. He alluded to the interchangeability of parts—a matter too often entirely neglected, especially by British manufacturers. He could mention a case which had come under his own notice in a power-house in which 8 sets of Willan's engines of approximately 800 h.-p. each were coupled to Thomson-Houston generators. One of the sets was down for repairs to the engine, and the station had all it could do to maintain the load in the evening peak. About one o'clock in the afternoon one of the remaining sets had an accident, the armature burning out. Owing to the sets being interchangeable, the engineers were enabled to take the machine from the damaged engine, pick it up with a 30-ton traveller, and couple it in place of the damaged machine to the sound engine, the essential parts fitting dead into place, and the compiled set from the two damaged ones was running on load by 5.30 the same evening. In another part of the station sets of approximately 1,000 h.-p. each were installed, but owing to their not being interchangeable with each other great inconvenience and trouble was often caused which might otherwise have been avoided.

He failed to follow Mr. Ruddle's reasoning with reference to the relative action of the fly-wheel and governor in controlling cyclic irregularities in a steam-driven alternator. It seemed to him that the fly-wheel had a distinct duty to perform apart from the governor. There might be anything up to 40 or more cycles per revolution, which would be irregular with any governor, so long as the reciprocating parts of the engine remained out of balance. The ratio between the unbalanced weights acting on the crank pin circle and the weight of the fly-wheel should be as large as possible in favour of the fly-wheel, within practical limits. The greater this ratio the less cyclic variation there would be. The governor, on the other hand, had to regulate the

Digitized by Google

speed with reference to the varying load, and he could not understand how the governor, with the best of dashpot arrangements, could properly compensate for the want of balance in the reciprocating parts, with the consequent irregularities. The speaker had seen a bad case of this kind in which a cure was obtained by improving the balancing in the way he had mentioned. He had run half a dozen machines in parallel on one governor satisfactorily, but upon their being synchronised with a machine whose engine parts were out of balance the irregularities occurred. Of course it was not wise to run a number of machines in parallel on one governor in practice, as in the case of a short circuit or fuse blowing great damage might be caused.

He would draw attention to the remarks as to the position of the station switch-board. He did not think it a wise practice to remove it from the engine-room, or arrange it in such a way as to necessitate the use of special signalling apparatus. He considered that it was a matter of the greatest importance that the switch-board attendant should be as near the machines as possible. All who had had the personal supervision of the running of plant of this nature would understand him when he pointed out that the smell of the insulation burning was one of the first indications of something going wrong. The attendant became educated to this, and also noted every variation of sound and the hum of the machines. The speaker knew of many instances in which a developing fault had been detected and the dynamo cut out of circuit before serious damage had been done. By removing the switch-board from the engine-house, or by placing it in such a position that it prevented the attendant from utilising his full experience and instinctive control, would be a mistake. He had known a case in which the switch-gear had been placed apart from

Digitized by Google

the engine-house and had had to be moved back eventually at a cost of some thousands of pounds.

With regard to the relative merits of the direct current and three-phase alternating current motor, they were all, no doubt, more or less familiar with the direct current machine, the manufacture of which had reached a high state of perfection, and it was quite able to hold its own as regards reliability with the steam engine. At the present time it was no uncommon thing to find the electrical side of a set doing all that was asked of it, whilst the engine was the constant source of trouble and breakdown.

He considered that where a suitable current could be obtained at a low price the direct current machine was the best for ordinary everyday purposes, and whilst comparing favourably with the three-phase machine in other respects, it had the distinct advantage owing to the greater starting torque that would be obtained with its use—a very important matter in starting up machinery under a heavy load. He had particularly noticed, in one instance recently where three-phase motors were used for tramway purposes on the cars, the want of acceleration as compared with that obtained by the use of the direct current machine.

At the present time one of our large ship-building firms was engaged in exchanging their three-phase plant for a direct current one, no doubt chiefly on account of the motors being better adapted for the heavy machines in use.

The reason for adopting the three-phase motor on the Continent was the great gain in efficiency through the use of a high potential system, which could be so economically conveyed from great distances, distributed and converted, by the use of static transformers, enabling current to be supplied at a lower cost than with a direct current system.

The cost at which electricity could be supplied was a most important one, especially so when considered in con-

Digitized by Google

nection with our manufacturers' competition for trade with those of foreign countries.

On the Continent electricity could be produced at a very low figure—so low that in those countries where the natural resources in the way of water-power were available, a price as low as £6 per horse-power hour for continual use throughout the year was charged, which worked out at about ¼d. per Board of Trade unit. For 12 hours per day approximately ½d. per Board of Trade unit, taken on the basis of one Board of Trade unit being equal to one and one-third horse-power hours.

They should look very much ahead in dealing with this subject, so as to successfully compete with these prices. Power-houses of something like 50,000 horse-power would be needed to generate on a large scale, and supply the manufacturer with his current at a low cost, and so assist him in his competition for the world's trade.

Mr. Moore asked the author if the rates and charges given in the paper referred to the City of Dublin. They must all admit they had very few manufactories in Dublin, and therefore there would be very little use for electricity.

He noticed in the scale that the charge for one hour was 7d., and the cost of producing was 7d., so in that case they were working without either loss or gain. At two the cost was 3·8 and the charge 4d.; at three hours the cost was 2·76, and the charge 3d. They all knew that in the City of Dublin the average consumer would certainly use electricity for not more than three hours. At that rate they would only make one farthing per hour, and he would like to know if that was considered sufficient to pay.

He would like to know how these rates and charges compared with what the Dublin Electric Tramway Co. offered to supply electricity at; also at what rates and charges the Tramway Co. were willing to give it to the Corporation.

Digitized by Google

Mr. Irwin (Chairman of the Public Lighting Committee, Dublin Corporation) said, as the President had invited strangers to speak on the subject, he would like to make a few remarks. The author had given them an immense amount of information in a very compact and popular form, and in such a manner that it was easy to grasp the questions contained therein.

Although he was only a layman and did not assume a knowledge of the technicalities of this work, yet he considered it rather absurd to hear the objection raised to the Pigeon House on the question of temperature by a gentleman who referred to his recollections of the place in his early days. He had, as Chairman of the Committee, visited many electric light stations in various cities, and in all these places the great difficulty was to keep the temperature down. To ventilate the place and make the stations comfortable when the boilers and other machinery were working seemed to be rather a problem. In the Pigeon House station he considered they would not be troubled very much with low temperature.

With regard to the supposed loss which the Municipality was going to suffer by reason of the distance of the generating station from the area of distribution, he thought there was not very much in that, but the author would dispose of it. He would prefer to see the station nearer, but they must remember the great facilities this station possessed in the way of getting their coal discharged alonsgide their boilers; also, that they had, free of cost, any amount of water for condensing purposes.

The last speaker referred to the table of charges which the author had given in his paper, but he was not aware that the author had suggested these as a basis of charges for the City of Dublin.

If they looked at the page they would read what the

Digitized by Google

author said before giving the tables:—"To take a concrete example from one of the most successful stations now in operation, the cost of production for varying hours' use per day is as follows." In arriving at a basis of charges they had to calculate the cost of production, which varied in different cities, according to the distance from which they had to get their supply of coal.

He considered the Corporation of Dublin had acted wisely in adopting the polyphase system. Their area of distribution was very scattered, and he believed the polyphase system for such an area was better than the direct current.

With reference to what the author states had been said by the Lord Provost of Glasgow about the rights of Municipalities, it was a sore point with business men. He thought there was a limit. Municipalities ought not to encroach upon private enterprise. He held, however, that they should own such concerns as electric light, gas, water, trams, and so forth. The Corporation ought to be the controlling influence in such things, for they were matters in which the public had a large and direct interest. Outside of that they should allow private enterprise to have its own fling. The Corporation were not unduly infringing upon the domain of private enterprise. They were taking their contracts from firms outside. Therefore he did not see there was any cause of complaint against them.

Mr. Roberts said he would like to make a few remarks, and he hoped they would bear with him. He was a lawyer, and as such was one of the public. He had heard the paper read, and as far as he could see it was a very interesting paper. But what he wanted to know was, will the system be better than gas, and will it cost less? To him it was principally a matter of price.

There was one thing that should be remembered, and

Digitized by Google

that was Dublin must advance. The motto of Australia was "Advance, Australia," and it was a very good one. Unfortunately Dublin was very much behind the times. They had seen what electric lighting could do in a few of their streets. Therefore let them have it in every street. Let them have all kinds of electric motive power for all purposes—shaving, hair-cutting, and everything else. But for the general ratepayers it was altogether a question of price. The question of the price of electricity seemed to stand upon the same question as the price of any other article. It depended upon the demand.

He hoped the scheme would not die, and that it would be well supported, so that the Electric Lighting Committee of the City of Dublin would be able to supply them with light at a much lower figure than that at which the Alliance Gas Company were supplying it at present.

Mr. Brew said there were one or two points upon which he did not agree with the author. With regard to the engines, the author seemed rather dogmatic as to the adoption of vertical engines. In any particular case you could use whichever was most suitable, whether vertical or horizontal. If you adopted the vertical type you would save floor space, but in some cases you would find it more costly, especially for lubricating and extra labour in getting the oil up and down the engines. You would have to consider this cost as an offset against the smaller floor space and rent, &c., incurred.

Another point referred to the clearing of water from the cylinders. If the water got on the top of the piston in the vertical engine it was rather awkward to get rid of it, whereas with horizontal engines, fitted with Corliss gear and exhaust ports at the bottom of the cylinders, there was very perfect draining.

On the other hand, horizontal engines occupy a con-

Digitized by Google

siderable floor space, and if you had any defects in the piston rings, and it was necessary to get extra lubrication into your cylinder, this was sometimes rather difficult, as the oil would often drop right through (from the admission to the exhaust ports) without lubricating sufficiently. If horizontal engines were left standing by for some time the piston rods were apt to rust from drippings from the admission ports, and the rust on the rods would rapidly cut the packing out of the glands and prove a nuisance.

With regard to the motors, he had some of the latest results that had been obtained from tests, and to his mind the three-phase was the ideal motor. It required very little attention, and gave good results. Generally speaking, he thought the three-phase motor could not be beaten for real mechanical simplicity and suitability for rough usage.

As regards the efficiency of the three-phase motor, it was, of course, increasing in efficiency and power factor daily, and the latest patterns could compare favourably with the direct current motor of equal power from 5 to 40 h.-p., which was about as large as was wanted for ordinary manufacturing purposes.

With reference to superheating the steam for the engines, this was extremely valuable, for along with the advantages of the increased steam temperature you would normally expect to gain an increased economy of about 20 per cent. in coal consumption.

With reference to the remarks made upon the Pigeon House station and the supposed loss in transmission that was to be entailed with the Corporation scheme owing to the distance of the station from the city, he considered it was not fair to criticise this scheme as the work was in course of being carried out at the present time. He could assure them, however, that the loss between the Pigeon House and Fleet-street was quite insignificant.

Digitized by Google

There would also be no trouble in supplying motors, either three-phase or single-phase, within the lighting area of the city.

[22nd January, 1902.]

Adjourned Meeting.

Mr. John H. Ryan, President, in the Chair.

The discussion on Mr. Ruddle's Paper was resumed, and occupied the evening.

Mr. Ruddle said he had the permission of the President to make a few remarks before the discussion was resumed. From the nature of some of the criticisms made a fortnight ago he inferred that the scope of the paper was somewhat misconstrued, and he desired to explain that this being the first time the subject of the Distribution of Electrical Energy in Cities had been brought before a meeting of this Institution he thought it advisable to cover the whole range, from inception to completion, upon general lines, dealing only with the broad principles upon which the most up-to-date installations have been designed and carried out.

Covering such an extent of ground it was obvious that to consider the various sections with any pretence to make an exhaustive analysis would have entailed a paper some hundreds of pages long, and the reference made to the Dublin installation was only introduced to show how closely the guiding principles he had laid down were being followed in their local work, and without any intention to invite detailed criticism of a scheme which was in course of construction, and which until finally completed could only be judged in the light of those general principles upon which it was based.

On general lines there was an ample field available for discussion. There were the various systems of generation and

Digitized by Google

distribution, the details of plant and mains, as well as the important question of the correct principle upon which the rates of charge should be based, and the most advantageous and diversified uses which could be found for the energy supplied; and he would suggest that the discussion that evening should turn upon the soundness, or otherwise, of the views he had laid before them.

Another point he should like to make clear was that of "cyclic irregularity" on page 42, as he was afraid that in his desire to condense he did not sufficiently explain the special points which arose in the parallel running of large direct-coupled alternating plants, as one speaker considered the difficulty could be overcome by means of a sufficiently heavy fly-wheel.

In a well-designed engine for mill-work, where steady running is essential, there is no difficulty in obtaining it by a properly-calculated fly-wheel, though even here the action of the trip-gear and the governor has to be carefully controlled, and in the design of direct-coupled alternating generators the same care has to be exercised in the first instance, so that individual sets will run steadily by themselves. When, however, these individual sets have to be operated in parallel, fresh sources of disturbance have to be overcome—some arising from the practical impossibility of building the sets so that they shall be absolutely identical in their mechanical and electrical properties, others caused by current oscillations in extensive systems of mains, where heavy inductive loads may be suddenly thrown on or off, producing momentary interchanges of current between the alternators, which tend to throw them out of step, and, in some cases, result in such violent "hunting" or "surging" as to cause serious variations of pressure in the distributing system.

The cycle of events seems to be that from some cause a

Digitized by Google

momentary oscillation occurs, and a slight interchange of current takes place between the alternators, accompanied by a slight relative variation of speed. The governors, if sensitive, endeavour to compensate for this variation, with the result that the slower engine is over-accelerated, and the faster engine is checked too much, and the oscillation receives a fresh impulse tending to increase the phase-displacement, a larger current passes, and this, if allowed to continue unchecked, will eventually result in the alternators being thrown completely out of parallel running by the accumulated disturbance produced by this too sensitive periodic action of the governors, and the effect of a heavy fly-wheel is to accentuate and maintain the phase difference.

The only effective remedy for this condition of things is to so damp or check the action of the governors that they do not respond to single small periodic variations, but only to variations lasting over several "periods," or to permanent changes of load, and, if so checked, the small synchronising currents between the alternators practically adjust themselves when the governors are prevented from responding to the momentary variations in the angular velocity, and the lighter the fly-wheel the more easily will the machines get into synchronism.

The effect of accumulative successive periodic impulses may be observed by experiment upon a flexible pendulum formed of a heavy weight hung from a light cord, which can be set into full swing by a series of slight impulses imparted to the cord, quite out of proportion to the actual mass, if applied at the proper successive intervals to obtain a cumulative effect.

Mr. Purcell said that at the last meeting, when the author read his paper, he (Mr. Purcell) made some remarks

Digitized by Google

which evidently had the result of the addition to the paper which the author had just made.

His remarks had been made in the belief that the particular portion of the paper dealing with the Dublin Corporation installation was a concrete instance of statements of the up-to-date electric lighting work which the author had illustrated so clearly in the prior part of his paper. The author now said that this portion was not to be taken as part of the paper, but only as an illustration of the state of the position of affairs.

Mr. W. E. Lilly said there were various opinions at the present day as to the best methods of transmitting electrical energy in cities, whether the alternating or the continuous current was the best. The problem that had to be faced was that when the power had to be transmitted from a distance to the various sub-stations it could only be done with economy by means of polyphase currents at high pressure.

In the Dublin Corporation scheme they had the station at the Pigeon House, and cables from there to Fleet-street. The scheme was on the three-phase system from the Pigeon House. By means of transformers the current was to be distributed through various sub-stations round the city.

The only point he would like to draw attention to was as to whether it was advisable to convert the three-phase system into continuous current by means of rotary converters. There was very considerable difference of opinions in the matter, but he thought there was a great deal to be said in favour of it. The distribution of the alternating current from the various sub-stations by means of transformers had some serious disadvantages to be contended with, more especially when inductive loads were likely to be thrown suddenly into some of the individual circuits.

If he was asked to give his opinion on such a scheme he

Digitized by Google

would possibly favour one which had generated its power with the three-phase system and then transformed it into continuous current at the sub-stations. Of course there were a great many motors in the present day with which there was no necessity to use continuous currents. If, however, these polyphase motors were placed on the lighting circuits there would be considerable variation in the lamps when they were switched in, and no doubt some curious results would arise.

Of course, in Dublin they had the alternating system in existence, and this, no doubt, was the reason the Consulting Engineer had adopted this scheme, which he hoped would be successful.

With regard to steam turbines, he would certainly recommend these under certain conditions. If they had a varying load he thought the turbines would be disappointing, but they would work wonderfully with a constant, regular load.

At Portsmouth station they had some steam turbines, and he had been told that their experience of them was fairly satisfactory. His ideal station would consist of a mixture of steam turbines and reciprocating engines, or some system whereby they could increase the power by adding or switching on additional engines whenever the load was increased.

With reference to the boilers. This was a question which possessed great interest, and there was a difference of opinion with regard to the superiority of the Lancashire or the water-tube boiler. The Lancashire boiler had been a good servant to engineers in the past, but there was a tendency now to substitute the water-tube boiler.

His experience was that in the water-tube boiler the evaporation per ton of coal was not so great as in the Lancashire boiler. He believed the Lancashire boiler would

Digitized by Google

still be used, and he did not see any reason why it should not. It would work for twenty years, and no water-tube boiler will work for that time. There was not very much difference in the first cost, and the up-keep was largely in favour of the Lancashire boiler. The author had great experience of the water-tube boilers, and he would like to hear his opinion on the subject.

Mr. J. Holliday said the paper was one of great interest to engineers, but to many of them it had a double interest, for as taxpayers they had a financial as well as a professional interest in the subject. He would allude to the cost of producing the steam required in an electric generating station considered as a separate item in the cost of the current produced. To keep this low it was essential that the load on the boilers should be kept uniform, not merely from hour to hour but from day to day, and even from season to season, if that were by any means possible.

A case had recently come under his notice in which an electric lighting company had been able to sell steam to a neighbouring factory that required power only during the summer months for refrigerating purposes, and it was found so advantageous to both parties concerned that the electric light company could sell steam to its neighbour at a price 12 per cent. lower than it would have cost the purchaser to make it himself, whilst the producer was in the happy position of selling at about a 40 per cent. profit, and at the same time keeping his men together, and his plant in good condition. Such a favourable conjunction of circumstances does not often occur, but the case serves to show the great advantage of a regular boiler load all the year round.

With reference to the boilers that had been selected by the Dublin Corporation. He heartily agreed with the last speaker about the Lancashire boilers. He had considerable

Digitized by Google

experience of various boilers, and he was strongly of the opinion that for steady economy nothing would beat the Lancashire boiler. It had one great defect, and that was the difficulty of getting up steam quickly. But there were many ways of getting over that.

He had an instance some time ago with a boiler practically of the Lancashire type, only without outside flues, in which he found the bottom of the boiler remained cold while generating steam in the top of the boiler. This set up racking strains which were very destructive to the interior of the boilers. That could be overcome by several methods. One of these, introduced by Mr. Geipel, of Edinburgh, was by means of plates attached to the under sides of the furnaces conducting heat to the lower portion of the boiler.

A better method, he considered, was by forced circulation. This plan had been adopted in several places. If there were a pump available it could be arranged for the water to be drawn from the bottom of the boiler and returned through the feed to the top, constantly keeping up the circulation during the raising of the steam.

With reference to the use of cheap fuel and mechanical stokers, a drawback to mechanical stokers was that they increased the cost of the maintenance. Mechanical stokers on boilers that are supplying steam to electric generating stations have this disadvantage that they cannot respond to a sudden demand for extra steam. It would take a mechanical stoker some time to alter its original consumption, even if forced draught were available. This, he considered, was a drawback to the use of mechanical stokers in electric light generating stations. In considering the question of cheap fuel they must bear in mind that the use of it caused increased capital expenditure. They would require larger furnaces, more labour in stoking, more

Digitized by Google

refuse to cart away, larger boilers, larger areas, larger rates and taxes. In comparing cheap fuel with the better class they should always base their comparison upon the total amount of fuel used rather than on the amount of steam produced.

Mr. Dick said with reference to the development of the water-power of Ireland for the generation of electrical energy, it was extremely difficult to obtain water-power on a large scale in Ireland at the present day owing to the fishery interests. These were so great that it was almost out of the question for any company to get water-power. For instance, on the Shannon there was a scheme to use some of the water for a power station, but the fishery interest required so much water that for some months per annum there would be none left for a power channel.

There was a lot of water-power running waste in Ireland that could be used for electricity if they could only deal with the fishery interests.

He hoped when the time came that the Corporation would give them as much information as possible, in the form of a pamphlet or otherwise, as to how they could use this power both for lighting and motors for domestic and trade purposes. There was a good deal of ignorance on the subject among the general public.

The Gas Company tried to facilitate the public in the various uses of gas, and he hoped the Corporation would do the same with regard to electricity.

Mr. C. Dawson said he believed that the future of this country depended largely upon the development of electrical power. They had been deprived of the supply of coal, but he could not say they had been deprived of fuel, because it was largely existent in the bogs of Ireland. But the peat had not been utilised in Ireland as it had been in Holland. The remarks of the last speaker pointed

Digitized by Google

out what could be done in Ireland by the use of the water-power.

He had given to the writer of the paper a report from a French paper showing what the French Government have done in view of the rapid advance of the application of electricity as a motive power. The Government had inquired into and published a return of the entire water-power of France, and the result is that every one horse-power of water has been harnessed to motors. The Minister for Industries has issued a pamphlet in which he said that the last century saw the destruction of the individual worker, and the concentration of mechanical power, and the power of capital, but that the new century was opened with another phase, which was the dissemination everywhere of power and the bringing back of the individual worker to his own home, where, by the touching of a switch, he moved his machine.

At home a man could work 10, 12, or 15 hours, and dispose of the production of his hands, and it had been clearly proved by statistics that designs in fabrics, ribbons, &c., had been produced by these home workers which never would have been attempted when the men were merely hands to carry out orders.

They had heard a good deal about the housing of the poor. In Lyons a whole mountain side has been filled up with separate cottages, to which gardens were attached. Every man in his own house has electrical energy supplied from the city, and the people are making there the products that formerly were made in the big factories.

It was the duty of everyone to advance this electrical movement in this country, and even England also needed to take up the subject more extensively.

He only stood on the fringe of the subject, but he hoped those young engineers who spoke so well and clearly on the

Digitized by Google

subject would use every effort for the utilisation of this power, and assist to bring about the regeneration of the industrial progress of the country.

Mr. Ruddle, in reply, said that he desired to thank them for their appreciation of his paper.

With regard to the remarks of various speakers on the question of boilers, while quite agreeing with them that the Lancashire boiler had been a good and useful servant in the past, and would still continue to be largely used for general work, he must point out that with the high pressures now in use the design of this type was theoretically and practically weak. It required to be strutted and stayed in a most elaborate manner to make its use safe, and after many years of knowledge and experience it had to be confessed that it was impossible to eliminate all the varying strains and stresses and compensate for their inequalities. The same difficulty existed to a great extent in the marine type of tubular boiler, and in spite of the immense assistance it got from its short length and mass of fire-tubes there was continual trouble from leakage, &c., caused by the varying expansions of the tubes and the cylindrical shell. All this trouble was avoided in the best types of water-tube boilers, as they were built up of a number of separate sections constructed in a form to withstand any required pressure, and capable of free expansion. The steam and water drums to which they were connected were of comparatively small diameter, and the whole boiler being suspended from an iron framework was free from the possibility of any undue strain being thrown upon the parts, whether idle or working.

Some of the speakers thought the cost of maintenance was against the water-tube boiler, and an instance was stated of a set of 28 boilers which required the renewal on an average of one tube a day. He thought the speaker's

Digitized by Google

recollection must have been erroneous, or that the "average" must have lasted for a very short period, and have been caused by exceptional circumstances. From some other remarks he gathered that the speaker referred to the City of London Company's station at Bankside, where the feed water was notoriously bad, and the boilers were at times overworked, but he was quite satisfied, from his personal experience in London, and that of many other engineers, that nothing but gross neglect could necessitate such heavy repairs under ordinary conditions, and that not more than 5 per cent. of the tubes should require renewing annually during the life of the boiler. In the Dublin station, with more than 2,000 h.-p. of these boilers, the entire renewals during 10 years amounted to 20 tubes, or ½ per cent. yearly, and most of these were caused by compulsory use of bad water during a period of scarcity. Their rapid steam-raising powers could not be approached by the Lancashire type, even with the adventitious aids suggested by one of the speakers. For instance, in a recent test of a Babcock and Wilcox water-tube boiler of 800 h.-p. steam was raised to 200 lbs. pressure in 15 minutes, the temperature of the water at starting being 66° F., and the evaporation from and at 212° F. was 11·96 lbs. of water per lb. of coal, having a calorific value of 14,000 Board of Trade units per lb. Their economy of floor space is of the utmost importance in the case of large power stations, and he would remind his critics of the fact that a station of 50,000 h.-p. would require at least 120 boilers of the Lancashire type, covering a floor space of 50,000 square feet at least, and a corresponding outlay in steam-piping, with consequent heavy loss from condensation, whereas boilers of the water-tube type would not occupy more than 12,000 square feet of floor space. Mr. Whieldon advocated having engines

Digitized by Google

and dynamos interchangeable in case of breakdown, and instanced the Bankside station, where this had been found of benefit. He thought the example was scarcely a good choice, as at the time these high-speed sets were installed neither the Willans engines nor the Thompson-Houston dynamos were free from serious defects in design, as he knew from painful experience, and hence breakdowns were more frequent than with the later and more improved designs. These, however, were comparatively small sets, and with units of 2,000 to 5,000 h.-p. such possible interchange would scarcely be feasible, and, indeed, would be unnecessary, as any ordinary repairs could be executed in less time than the interchange could be effected, and with the improved methods of construction now evolved plant breakdowns are becoming rare, beyond the temporary disuse caused by a hot bearing.

His supplemental remarks upon "cyclic irregularity" should, he thought, make the matter fairly clear, but in any case he could assure Mr. Whieldon that when the governor was controlled in the manner described the remedy had proved a success in every instance, and was, in fact, the only one which had been found of practical value. With regard to the parallel running of several engines controlled by one governor, this had been tried 8 or 10 years ago and proved an absolute failure, and could not be otherwise from the practical impossibility of constructing several sets of plant so as to be absolutely identical in their running qualities.

The paragraph on p. 31 to which Mr. Whieldon took exception is perfectly correct as it stands, and fully covers the general principles.

As regards the position of the switch-board, the best modern practice endorsed the views advocated in the paper.

As to the relative merits of distribution by three-phase

Digitized by Google

alternating and by continuous currents, he had little to add to his previous statements. Both had advantages and disadvantages, and it depended upon the special necessities of each case as to which should be adopted. The tendency in the most important power-stations recently erected was to adopt three-phase distribution throughout, and in no instance where this had been done had it been found unsuitable either in cost or efficiency. Several speakers had suggested that there would be difficulty in dealing with the existing single-phase system when the new Pigeon House installation was brought into use. No doubt, if the Consulting Engineer had been able to start with a clean sheet he would have made the entire system uniform, but as a large sum had been recently expended in a new system of mains in the present area it would have been unwise not to make use of it as far as possible, and it must be borne in mind that single-phase alternating current was perfectly suitable for lighting purposes, and fairly good for motor work. Of course, all extensions in the present area would in future be made with three-phase mains, and as the feeder-cables from Fleet-street to the new sub-stations would pass through the principal streets in the present area, there would be no difficulty in giving a three-phase supply to anyone who might desire it for motor purposes.

He quite agreed with several of the speakers that the steam turbine had a great future before it, and would prove a formidable rival to the older type, which seemed to have almost reached its highest point of development.

With regard to mechanical stokers, he agreed with the various speakers that their use depended largely upon the class of fuel available. But their weak points were that they could not be "forced" in an emergency, and that their maintenance charges were high.

His reason for suggesting that the discussion should

Digitized by Google

follow the broad lines upon which the paper was written was the desire to make it more generally useful, as it was, obviously, difficult for speakers to discuss points of detail in the new Dublin scheme with which they were not familiar, but he recognised the right of everyone to ventilate their own opinions. He would only deal with one point which had been strongly commented upon—namely, the foundations at the Pigeon House, and he could assure them that up to the present no difficulty had been found in securing suitable foundations, and he thought that the responsible engineers would be quite capable of dealing with any future difficulties that might arise. He might mention that the consulting engineer for the new Brighton electricity station, who once gave evidence against the Dublin site, was actually placing his station in practically a similar position on the seashore some three miles from Brighton, and though great trouble and expense had been incurred in the foundations the construction was being pushed on in spite of the difficulties. He thought that the Corporation had been very fortunate in having escaped this at the Pigeon House, and saw no reason why the foundations there should not be quite satisfactory.

Several speakers referred to the water-powers in Ireland, but that subject was outside the scope of his paper. He hoped; however, that it would be found possible to make them commercially useful in the near future.

The President (Mr. J. H. Ryan) thought that some of the visitors or members would have touched upon the question of municipal trading, which was agitating the public mind in the public prints of late. They would have liked to have had some discussion as to whether the Municipality was justified in laying out the ratepayers' money in private plant on an enormous scale.

Mr. Dawson had referred to the water-power of Ireland,

Digitized by Google

and it would be a great advantage if these inherent powers could be utilised. He knew it could be obtained at a very small cost, but they would not be able to transmit this power except the Board of Trade reduced their onerous requirements.

In America they were able to distribute their electric power for immense distances chiefly by overhead wires. He considered that their Members of Parliament should urge upon the Government to relax these conditions.

He was sure they would all join with him in a hearty vote of thanks to the author.

Digitized by Google

[5th February, 1902.]

MR. J. H. RYAN, President, in the chair.

The following Candidate was balloted for and duly elected :—

HARDINGE STANLEY RYAN, as Member.

Digitized by Google

[5th March, 1902.]

MR. JOHN H. RYAN, President, in the Chair.

The following Candidates were balloted for and duly elected:—

Messrs. WM. COLLEN and ROBERT J. KIRWAN as Members; HENRY FORREST KERR, JOHN PANSING, and ARTHUR WILKINSON WHIELDON as Associate Members.

The following Medals and Premium awarded by the Council were presented:—

Mullins Gold Medal to FRED. J. DICK, Member, for his paper, "Some Notes on Waterworks."

Mullins Silver Medals to MICHAEL J. BUCKLEY, Member, for his paper, "Steam Road-Rolling," and to R. G. ALLANSON-WINN, Member, for his paper, "The Constructive Power of the Sea."

The Chaloner-Smith Premium of Books to W. R. MAGUIRE, Associate, for his paper, "Heating by Steam at and below Atmospheric Pressure."

The vote of thanks of the Council was also conveyed to the authors for the following papers:—

JOHN H. RYAN for his paper, "The Galway and Clifden Railway."

MARMADUKE PURCELL for his paper, "The Utilisation of Sewage."

R. G. ALLANSON-WINN for his paper, "Notes on Road Construction."

NOTES ON THE DESIGN OF BREAKWATERS.

By FRED. J. DICK (Member).

IN the following notes it is proposed to deal only with the principles which should underlie the design of breakwaters of the vertical wall type, and to show how these

Digitized by Google

principles may be applied. The various combinations of breakwater and quay with sheltering parapet, rubble mound with flat sea slope, vertical wall and rubble mound, etc., will, therefore, not be referred to, for if the correct principles are clearly understood, their application to special cases should present little difficulty.

It is now generally admitted that breakwaters, however designed, are all subject to attack by waves of translation in storms, as distinguished from purely oscillatory waves, and the water reaching the resisting surface has for the moment the velocity of the wave.

Now, there are three aspects of the force with which the sea attacks a wall which do not seem as yet to have been fully treated of. These are—(*a*) The relation between the horizontal velocity of the waves and the velocity with which the water is shot upwards on reaching the wall; (*b*) the relation between these velocities and the pressure exerted against the wall; and (*c*) the extent and variation of this pressure at different heights and depths above and below the mean wave level at the time of impact.

It is true that there have been experiments made with the marine dynamometer, invented by the late Mr. Thomas Stevenson, in the course of which he established the important fact that the pressures registered on these instruments represented continuous pressures, and not those of sudden impact such as were produced by dropping cannon balls upon them. As he said, "they supplied just the kind of information the engineer wanted." But one would wish to know also what were the wave velocities, and to what height the spray rose against the sea wall when the dynamometers recorded their greatest pressures. And did the maximum results obtained—three and a-half tons per square foot—represent the probable maximum?

Digitized by Google

As to the latter point Mr. Stevenson himself had grave doubts, and he considered the probable maximum much higher. Then there have been experiments on the height of waves, and on their velocities in various depths of water. The pressure has been deduced from the actual displacement of a known mass of material under given circumstances, and the probable pressure has in other cases been estimated from the head of water corresponding to the average estimated velocity of the waves—a method which it is now proposed to show contains two serious errors. What seems to be lacking is a complete correlation of the known facts and the known laws of hydraulics as bearing upon the design of breakwaters.

Let us first consider the relation existing between horizontal and vertical velocities. In a storm at Peterhead the waves, 30 feet in height, were estimated by Mr. Shields to have an average velocity of 30 miles per hour, and on striking the breakwater the spray occasionally rose 120 feet. This would correspond to an initial vertical velocity of 60 miles per hour. No explanation of this apparent anomaly seems to have been given, save perhaps that the result is due to the non-elasticity of the water. But such an explanation is one that it is now suggested need not be called in to account for the facts, for it seems to fail at the outset if we observe what actually occurs when waves assail a breakwater. What do we find? That although a regular succession of waves approaches and strikes the work, it is only occasionally and at certain points that the spray is seen rising suddenly to an exceptional height. Surely this is nothing but a case of wave interference. When two waves unite, their resultant velocity is the sum of the velocities of the separate waves. In the commotion due to shape of sea-bed, slope of shore, changes of wind and of distant storm centres, all more or

Digitized by Google

less causing cross changes of wave direction, nothing would be *à priori* more likely to happen than that occasionally two waves should either partly or wholly unite their velocities; and so we should expect a horizontal velocity of say 44 feet per second to be occasionally augmented to 88 feet. There is, besides, a reason, as we shall see presently, why the initial vertical velocity should be just equal to, and not greater than, the horizontal velocity of impact. There is another cause, competent to nearly double the velocity of a wave stroke—namely, a very rapid diminution of depth, which has the effect of tripping up and hurling the wave forward against an obstruction with increased velocity. Notable instances of this action occur at lighthouses situated upon isolated rocks with deep water quite near. As a general rule the depth for calculating the average wave velocity approaching a breakwater should be from about one to two wave lengths from the work. And if there is very rapidly-shelving ground the effect of the two elements of sudden tripping up and of occasional partial or total coalescence of two waves should be considered in estimating the occasional maximum velocity of attack.

The length of breakwater attached simultaneously by such coalesced waves is fortunately as a rule very short, otherwise there would probably be fewer breakwaters of the vertical type standing to-day. This short length of maximum attack is probably due to the fact that by the nature of the case such coalescence is not likely to extend far in a straight line. Waves approaching a work in any direction other than at right angles to a straight and uniformly sloping shore line are generally curved on plan, and, moreover, coalescence in the case of waves near a shore line usually implies intersection rather than parallelism. Then as to the initial vertical velocity, ex-

Digitized by Google

cept when the waves attack high cliffs where the wind carries the spray up with it, of course it would usually be slightly greater than that due to observed height of spray, owing to air resistance, but as the height of spray is difficult to observe accurately, such refinements are unnecessary for our purpose, which is, if possible, to get at a reliable means of estimating the equivalent static force of maximum wave attack, so that we can design a breakwater in a given situation with some degree of confidence as to its stability.

Now, as to the relation existing between horizontal velocities, whether average or maximum, and the pressure exerted. Here again the wide discrepancies between pressure due to head calculated from mean wave velocity and the actual pressures recorded or deduced from known displacements of certain masses have been attributed to the non-elasticity of the water. One element in this probably mistaken view of the matter has already been alluded to—namely, the difference between mean and occasional maximum velocities. The other element is a very important one, which seems to have been hitherto somewhat unaccountably lost sight of. It is that a continuous stream of water impinging upon a flat surface at right angles to it exerts a pressure which is not that due to the head corresponding to the velocity of impact, as has too often been assumed, but which, on the contrary, is that due to *twice the head corresponding to that velocity.*

It will be at once apparent that the combination of the two elements referred to—namely, increase of velocity due to coalescence, or to tripping up, or to both, as the case may be, and increased pressure due to the law now adverted to, goes far to account for many of the apparently extraordinary results achieved by storm waves. The investigation of this law of pressure has another important

Digitized by Google

aspect, for it enables us to estimate pretty accurately the effects due to obliquity of wave attack. The subject of stream pressure is dealt with in Rankine's "Applied Mechanics," and the results have been confirmed experimentally both as to the pressure exerted by a jet of water against a plate, and as to the pressure required to maintain a thin plate against a steady current. The subject seems so important that a brief recapitulation of the main features of his analysis may be useful.

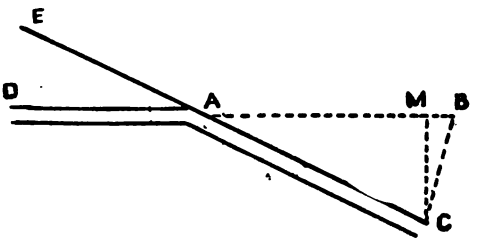

Fig. 1

Let a stream of water DA of unit cross sectional area (say one square foot), and having a velocity of v feet per second, and density per cubic foot of say 64 lbs. (the weight of sea water) impinge against a flat, smooth surface EC, having guides thereon to keep the water when deflected of the same width. Neglecting friction the velocity along AC will be the same as the velocity along DA, for the only force exerted on the particles being perpendicular to their direction of motion that force cannot accelerate or retard the motion, but can only deviate it. The mass discharged per second is obviously 64 v, and the momentum of the quantity of fluid deflected is $\frac{64v}{g}$. Let AB in DA produced represent v. Make AC = AB, then BC represents the change of velocity undergone by each

Digitized by Google

particle. Let a represent the angle BAC. Then BC = $2v \sin \frac{a}{2}$. The change of momentum per second is therefore

$$F = \frac{2 \times 64 v^2}{g} \sin \frac{a}{2}.$$

This may now be resolved into a force F_x parallel to the original direction of the stream—*i.e.*, drawing CM perpendicular to AB,

$$F : F_x :: BC : MB :: 2 \sin \frac{a}{2} : (1 - \cos a).$$

Therefore
$$F_x = \frac{64 v^2}{g}(1 - \cos a)$$

or
$$= 2 \times \frac{v^2}{2g} \times 64(1 - \cos a)$$

But $\frac{v^2}{2g}$ is the head of water which would produce the velocity v. Call this head H.

The force F_x is therefore $= 2H \times 64(1 - \cos a)$.

Now, if $a = 90°$, $\cos a = 0$.

And the force opposed by a plane perpendicular to the stream is $F_x = 2H \times 64$, or the weight of a column of sea water of twice the height corresponding to the velocity.

Hence, too, we see that if $a = 60°$, $F_x = 2H \times 64\ (1 - \frac{1}{2}) = 64H$, the weight of a column of water of just the height corresponding to the velocity.

Thus it is demonstrated that a breakwater with its sea face inclined at 60° to the horizontal will be acted on with only half the pressure exerted against a vertical wall. And also that if the direction of wave advance is inclined at 60° to the direction of a vertical wall, the latter need be only half the strength required to resist the same waves coming on at right angles.

For 45°, $F_x = 37\frac{1}{2}H$, or only 29 per cent. of the force exerted against a vertical wall.

Now suppose that both the sea face and the direction

Digitized by Google

of wave advance are inclined to a vertical plane in the direction of the breakwater. Let b be the acute angle at which the sea face is inclined to the horizon, and c be the acute angle in azimuth which the direction of wave advance makes with the direction of the breakwater. Then $\sin^{-1}(\sin b \sin c)$ must be substituted for a in the foregoing equations.

Obliquity of attack is a very important element, and in fact all well-designed breakwaters are laid out so as far as possible, and especially the deep water portions, to be at a distinct angle to the direction of the greatest storm waves. Of course in such cases the danger of scour along the sea base of the structure has to be guarded against, but these constructive details are outside the scope of the present notes.

The third element in the case is the extent and variation of the simultaneous pressure. Here we can fall back upon the results of experience fortunately, for the problem would otherwise be a difficult one. At twice the height of the wave crests above mean level of waves—that is, at the height to which waves of oscillation rise against an upright wall in undergoing complete reflection, the horizontal pressure is nil. At about the mean level of the waves it attains its maximum. At the level of the trough of the waves it has been found to be about half the maximum, and at a depth below mean wave level of twice the wave height it is again practically nil. Correlating these observed facts an approximate solution will probably be two vertical-axis parabolas having their common vertex at one end of the horizontal line representing in position and length the maximum pressure at a given state of tide, and cutting the vertical ordinate at the other end at the height and depth of no pressure above indicated.

In estimating the probable velocity of storm waves

Digitized by Google

their probable height may be first calculated by Mr. T. Stevenson's well-known rule, height in feet $= 1\frac{1}{2}\sqrt{\text{fetch in nautical miles}}$. That is, granting that the depth is not less than $1\frac{1}{2}$ times the wave height. Then if d be the depth in feet below the trough of the waves, and h be the wave height,

$$v = \sqrt{2g(\tfrac{1}{2}d + \tfrac{3}{4}h)}. \quad \text{(Rankine.)}$$

It should be noted here that the wave height has been known to exceed that deduced from Mr. Stevenson's formula above given (for long fetches) by as much as 30 per cent., but this is very exceptional.

Using suitable Admiralty charts, we can, therefore, calculate the approximate mean velocity of storm waves; and also to some extent estimate the probable direction at the breakwater site of the worst waves. The latter, however, is better obtained from local sources of information.

We may now take a typical case and see where the application of the foregoing general principles would lead us.

Let us assume a low water depth of 20 feet, a tidal range of 15 feet, a fetch of 50 nautical miles, top of breakwater 6 feet above high water, worst waves approaching at an angle of 60° to the direction of breakwater, and the tide at high water level. Here the height of wave would be about 10 feet. Average velocity $= \sqrt{2g(\frac{1}{2} \times 30 + \frac{3}{4} \times 10)}$ $= 38$ ft. p. sec. Extreme maximum due to interference, 76 ft. p. sec., for which $H = 90$ feet. For vertical wall, $F_x = 2 \times 90 \times 64(1 - \cos 60°) = 5760$ lbs., or 2·57 tons per square foot.

In Fig. 2 let HJKL be the cross section of a monolithic breakwater of the given height with vertical faces. On the high water line mark off AB to any convenient scale to represent the maximum force of 2·57 tons. On the ordinate through A mark off AC = 10 feet, and AD = 20 feet.

Digitized by Google

Draw the parabolic curves BC and BD having their common vertex at B. Draw EF at the level of the top of breakwater. The figure EFBDE represents the pressure, and dividing its area by its height DE the average pressure is found to be 1 ton, and as DE is 26 feet, the total force is,

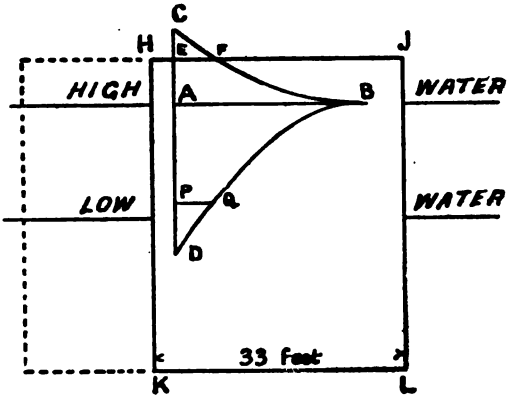

Fig. 2

therefore, 26 tons. Taking a sliding coefficient along KL of 0·70, the weight required to resist sliding is 37 tons. As the breakwater would be almost wholly immersed its effective specific gravity would be about $1\frac{1}{4}$ times that of sea water, and the width HJ required would therefore be 25 feet. But it must also be secure against overturning. The height of the centre of gravity of the figure EFBDE is 32 feet above KL, therefore the overturning moment is $32 \times 26 = 832$ foot-tons. The proper breadth should therefore be

$$\sqrt{\frac{2 \times 2240 \times 832}{41 \times 1\frac{1}{4} \times 64}} = 33\tfrac{1}{2} \text{ feet.}$$

Now suppose that from the level of 2 feet above low water down to the foundation this work is constructed of concrete blocks, and above that level of concrete *in situ*. There will then be a horizontal joint at 2 feet above low water, and the

Digitized by Google

mass above that level is practically deprived of the assistance of the weight below. Draw PQ on the force diagram at this level. EFBQPE represents the force acting on the concrete *in situ*, and it averages 1·27 tons. This gives 24 tons on the height of 19 feet, requiring a weight of 34½ tons for the concrete *in situ*, which would, therefore, have to be fully 50 feet wide, or 22 per cent. more than the height of the breakwater. This greatly increased width needed to counterbalance the effect of a horizontal joint 2 feet above low water is indicated by the dotted lines in Fig. 2.

Now suppose the sea face to have an inclination of 60° to the horizon, and the waves approaching the breakwater at the same angle to its direction as before—namely, 60° also. Here $a = \sin^{-1}(\sin^2 60°) = 48\frac{1}{2}°$.

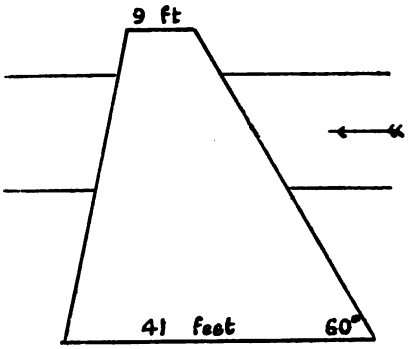

Fig. 3

Without going further into details, Fig. 3 represents the result, assuming once more that the mass is absolutely monolithic. On the data assumed such a breakwater would be secure against sliding and overturning, but the practical difficulties of so constructing it would more than counterbalance the saving in material. A 10-foot length of it would weigh in air 660 tons.

Digitized by Google

Some intermediate design must, therefore, be sought, and Fig. 4 represents a first approximation to such. In this design the difficulty about a horizontal joint is overcome in a very simple manner, as will be seen. The work below low water is here supposed built of two courses only,

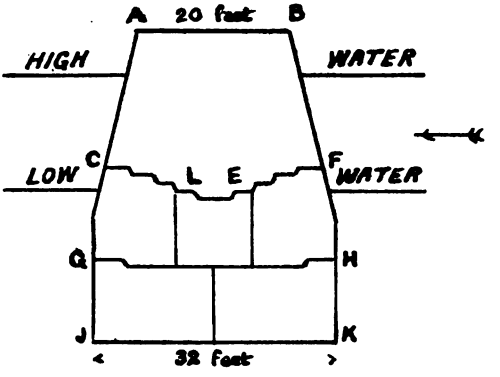

Fig. 4

of large blocks, the upper ones having two steps each 1 foot high, formed upon them, a third step being formed by the lower level of the central block, and a fourth step being formed on the upper surface of the latter for the concrete *in situ* to rest in. The steps CL have to take up a deficiency of sliding resistance of 12 tons, and that shown at G of about 4 tons.

The width of base JK is 32 feet, and the mean width $27\frac{1}{2}$ feet, so that as compared with the $33\frac{1}{2}$ feet wide monolith of Fig. 2 there is a saving of material of 18 per cent.

Fig. 2 could be constructed partly of block-work in the same way as shown in Fig. 4, so as practically to act as a monolith.

The difficulty of handling large blocks can be overcome to some extent by casting them hollow, and filling them after they are in place with concrete deposited in skips.

Digitized by Google

Should the nature of the ground admit of whole balk sheet piling, the block-work may be dispensed with altogether, and a design, such as that in Fig. 4, omitting the blocks, carried out by depositing the concrete below low water in skips inside of the sheet piling. It will, however, be desirable then to have a less batter, and the mean width would therefore approximate more closely to that in Fig. 2—namely, 33 feet.

Finally, for portions of the breakwater which may be unavoidably at right angles to the direction of the worst waves, and constructed so as to be practically monolithic, the mean width would have to be 46 feet.

Enough has been said to illustrate the application of the general principles suggested, and it may be mentioned that on applying them to certain breakwaters of the vertical type which have wholly or partially failed—from causes due neither to defective materials, workmanship, undermining by insufficient protection against scour, nor to inadequate foundations—it will be found that the failure could have been predicted by their means with a reasonable amount of probability, and without assuming extravagant or unlikely data as a basis of calculation.

THE PRESIDENT (Mr. J. H. Ryan) said the Institution and members present were greatly obliged to the author for the very useful paper he had contributed, and he hoped it would bring forth a good deal of discussion.

The paper dealt entirely with designs and structures, and merely touched upon construction. It emphasises, however, the general principle to be followed in all marine works subject to heavy seas—namely, that the size and weight of the monolith should be in proportion to the exposure of the situation.

It had occurred to him in connection with these mono-

Digitized by Google

lithic structures, which were composed of concrete, inside tubes, that in Ireland we had been depending upon artificial lime and cement, whereas they ought to know that hydraulic lime exists in immense quantities in our own country. It was a very admirable product, far stronger and more suitable for structures of marine works than the artificial cement.

The Board of Works had used it in the construction of some of the piers around the coast of Ireland many years ago and it has stood the test of time. He believed it had been used instead of cement in the construction of the Limerick Dock and other large works.

MR. J. P. GRIFFITH said the subject of Mr. Dick's paper had attracted his attention for a great many years. He congratulated the author on the vigorous way in which he had attacked the problem.

It was surrounded with great difficulties, and a great deal of our knowledge necessarily depended upon the experience which engineers gained in marine work, and which they were gradually able to collect.

This paper reminded him of one that had been read in the Institution more than twenty-five years ago, in the discussion of which he took part.*

About that time they were exercised in their minds over certain failures of breakwaters which had startled them, and shaken confidence in existing methods of breakwater construction.

Their leading engineers at that time pronounced some of these failures as beyond explanation, and some of them almost despaired of making a vertical breakwater that would stand and resist the force of the sea.

He wished the author had been able to show them photographs of breakwaters under the influences of these forces.

* On Natural Sea-margins, Piers, and other Sea-walls. By G. H. Kinahan. Volume XII., Transactions Inst. C. E. of Ireland.

Digitized by Google

The failure of the Wick breakwater was the central point on which the minds of those engaged in marine work were fixed about the year 1875 or 1876.

A paper was read before the Institution of Civil Engineers on "The Manora Breakwater" by Mr. Price about this time, and in the discussion some remarks were made by Mr. David Stevenson, who referred to the failure of the Wick breakwater. He was able to give the actual experience of his resident engineer, who was present during its destruction. He referred to the first failure of the Wick breakwater, when the resident engineer saw the large block of 1,350 tons weight carried off by a succession of waves, and deposited in the harbour. Mr. Stevenson, in his remarks on Mr. Price's paper, said that the block in the Wick breakwater was being replaced by another of 2,600 tons, but he did not venture to say that this weight would finally prove to be sufficient in this particular pier. He had suspended his judgment, but he had evidently done his best with the funds at his disposal. He had left it an open question. They knew now that the block of 2,600 tons had subsequently been shifted in the same way as the other.

Mr. Dick gave them a further example of a still larger block of over 3,000 tons, which had been slightly shifted, though only for a few inches.

These problems drew attention to the difficulties with which they were confronted. It was necessary that these failures should be explained, and that they should be faced boldly.

His (Mr. Griffith's) contribution to the discussion on Mr. Kinahan's paper was an endeavour to give a rational explanation of the cause of the failures at Wick. Without such an explanation, it would have to be admitted that the construction of marine works was only guided by "the rule of the thumb."

Digitized by Google

Mr. Dick's paper was an important addition to the literature on the subject, and it was a source of satisfaction that it found a place in their "Transactions."

With reference to the hollow blocks, he had sufficient experience of these to speak with some authority, and he had no hesitation in asserting that the hollow block referred to by the author was a thoroughly practicable method of construction. He hoped they would be used in some of their large harbour works.

Unfortunately the great piers now in progress at Dover were being built with what might be called small blocks—following the old methods. He greatly regretted their professional brethren on the other side of the water had not the nerve to face the problem with some of the more modern methods.

The paper was full of interest to those who are engaged in this class of work, and if the author would develop it further it would be of immense use and profit to the profession at large.

Mr. Lilly said the author had attempted to evolve a method of estimating the force required to overturn a breakwater. Owing to its complexity it was a difficult problem, and the author was to be congratulated on the ingenious way in which he had attempted to solve it. He could not, however, altogether agree with what had been put forward, and desired to call attention to one or two points.

The first was with regard to "the effective specific gravity of the breakwater," which the author had taken about $1\frac{1}{4}$ times that of the sea water; this assumed that the breakwater was wholly water-borne, which was not the case. Some portion of the breakwater certainly rested on the bottom; if W represented the weight of unit width of the breakwater, w the weight of water it displaced, and n a fraction representing the portion of the breakwater which was water-borne,

Digitized by Google

then the reaction on the bottom would be $W - nw$. The probable value of n he thought would be from $\frac{1}{4}$ to $\frac{1}{2}$, which would give "the effective specific gravity" somewhere about 2. This value would reduce the required breadth of the wall considerably.

Also the author had assumed that "the water reaching the resisting surface has for the moment the velocity of the wave," and calculated the pressure that would be produced on the resisting surface in terms of this velocity. He could not agree with this. Doubtless the water reaching the surface had some velocity which was compounded with the wave motion. The problem was complex owing to the pressure produced by the interference of the waves, and that due to the velocity. He would be inclined to try and separate the pressure due to the effects separately, and the result would give the pressure considerably less than as calculated by the author.

Mr. Dick, in reply, said, with reference to the use of hydraulic lime in sea works, he would have to speak very cautiously, for he had no experience of it. Ever since he commenced harbour engineering, thirty years ago, he had been accustomed to nothing else but Portland cement in marine work, apart from special quick-setting cements for protecting the surface of new concrete from the wash of the sea. If it could be shown that good and permanent marine work could be done with hydraulic lime, it might perhaps be cheaper.

With reference to the hollow blocks, they used these at works he was on at Dundee. They were each 40 tons in weight, equivalent to 100-ton blocks when set in place and the hollows filled up. They endeavoured to make them float by fitting covers on them, with India-rubber joints, so that when the tide rose to high-water they could be floated out to the sea wall. But the idea was too ingenious to work,

Digitized by Google

for, unfortunately, they found the India-rubber joint would not keep the air in. Nevertheless they found these hollow blocks were easily handled between two barges, and carried to the sea wall, dropped in position, and the hollows filled afterwards.

He did not altogether agree with Mr. Lilly about the specific gravity of breakwaters.

Nearly every breakwater with which he was acquainted was water-borne. The surfaces in contact where blocks or bags rest upon the bottom of the sea are not smooth, and there are considerable areas open to water pressure, to say nothing of rock fissures, &c.

In the case of the Vyrnwy masonry dam of the Liverpool waterworks, where the rock was exposed in full view—unlike submarine work—Mr. Deacon, nevertheless, allowed for a considerable width from the inner face being water-borne to the full head of pressure, when designing the cross section.

The exact effect of the coalescence of waves was the only point as to which there was any doubt. He simply said the waves coalesced, but whether the result due to this cause *alone* might in some cases reach a double velocity or not he was not prepared to say. Rankine clearly says the resulting movement is the sum of the movements of the coalescing waves. He only threw out the suggestion, and, as stated in the paper, it has the advantage of agreeing pretty closely with observed facts.

He considered the criticism Mr. Lilly had offered with regard to specific gravity most valuable, and there would sometimes be cases where the principles Mr. Lilly had drawn attention to would require to be carefully considered.

Digitized by Google

[2nd April, 1902.]

MR. ROBERT COCHRANE, Vice-President, in the Chair.

The following candidate was balloted for and duly elected :—
CHARLES HENRY DAVIS, as Member.

THE STRENGTHS OF THE MATERIALS OF CONSTRUCTION.
(Plates I. to VI.)

By W. E. LILLY, Member.

THE testing of the materials used in most of the engineering works of any magnitude is one of the features of the present time, and has, no doubt, to a large extent been brought about by the establishment of laboratories and to the advances that have been made in the construction of machines for testing purposes.

The majority of the laboratories of the Schools of Engineering are furnished with testing machines for various purposes, which may be said to form a necessary part of their equipment. By their use the student gains a practical knowledge of the properties of the materials of construction, and the profession the advantage of having materials tested on which an unbiassed opinion may be desired. For the purposes of investigation such machines are necessary. By their means experimental data is obtained on different materials under various tests which would not usually be applied.

A wider dissemination of the knowledge of what may be expected of the materials of construction has thus been spread amongst the profession, with the result that specifications giving the tests to which the materials for any important work will be subjected are now issued as a matter of course.

Digitized by Google

There is, however, a fundamental difference in carrying out the tests on the materials in accordance with a specification and the tests carried out for experimental purposes in a laboratory. In the one case the materials are tested, it may be, on the works or independently by the engineer or some other authority, the material being passed or rejected, and there the matter ends, so far as the tests are concerned. By careful tabulation and comparison with like tests some inferences may be drawn as to the behaviour of similar materials. The results are, however, limited in their application owing to the tests being few and only immediately applicable to the particular purpose for which a material is to be applied.

For instance, in a specification for steel for bridge work it may be specified that the breaking strength under a tensile test shall not be less than 28 tons per square inch, nor greater than 32 tons per square inch, with an elongation of 22 per cent. in 8 inches before fracture; the steel is to pass this test with probably one or more tests for bending. Now, these tests are designed for the purpose of determining if the steel is suitable for this particular class of work, and the results will give no indication as to what might be expected from the steel under different tests.

In the laboratory, on the other hand, the tests that are applied to the material are made with a view of determining the properties of the materials, the results being carefully scrutinised to find if any general law obtained, or that there is any general interrelation among the tests which would make it possible to formulate what may be expected of a similar material when subjected to certain tests, and in some measure to predict the results of applying other tests. For example, suppose the strength of a material for tension and compression were obtained, would it be possible to predict what the shearing strength should be?

Digitized by Google

It is from this point of view that the author considers the strength of the materials of construction in this paper. Given the strengths of a material respectively to tension, shear and compression, is there any relation between these quantities which will admit of a general interpretation? In what follows an hypothesis of the constitution of isotropic materials is put forward, from which certain conclusions are deduced. These conclusions are compared with the experimental data mostly obtained from laboratory tests, and found to agree fairly well, sufficiently so to allow of some interesting speculations from purely theoretical grounds as to the relations that obtain between the strengths of a material.

To form some rough conception of the hypothetical constitution of the isotropic materials referred to, imagine a rectangular block, somewhat as in Fig. 2, to be made up of a series of filaments, with numerous particles interspersed throughout the block, and, to make our ideas clearer, that the filaments, instead of running about in all directions, are arranged so as to be parallel to three mutually perpendicular planes, as in Fig. 3. Such a material would approximately fulfil the conditions of being isotropic—that is, if equal and similar portions were cut from any position in the block they would exhibit the same properties. Most of the materials used in engineering construction—such as metals, stones, concrete, and other like materials—are isotropic in their character, and the author only considers such materials in this paper, as many troublesome assumptions would be required if æolotropic materials were dealt with.

The effect of applying a thrust to the block in Fig. 2 in the direction of its length would cause the particles to spread, and the filaments at right angles to the direction of the thrust to be in tension, or, in other words, the par-

Digitized by Google

ticles are tied together by the filaments. The compressive strength of the material would depend on the frictional resistance of the particles and the strength to tension of the filaments. It follows from the mathematical analysis given in the appendix that if a thrust of p lbs. per unit of area be applied to the end faces, that on any plane at right angles to the direction of the thrust there is also a tension of p lbs per unit of area for equilibrium; this tension is taken up partly by the filaments and partly by the frictional resistance of the particles. This result can also be shown, by considering the block in Fig. 1, to be divided into two parts by the plane AB, inclined at an angle θ. Under the action of a thrust of p lbs. per unit area over the end faces the blocks would tend to slide. To prevent this apply a thrust of q lbs. per unit of area over the side faces. If the plane AB has no frictional resistance—that is, if it is smooth—the value of p can be shown to be equal to q. If, on the other hand, there is a frictional resistance to sliding, p is greater than q—the difference between p and q being taken by the frictional resistance of the particles. The investigation shows that these results are true for all values of θ, the angle of inclination of the plane. Now suppose the thrust q to be replaced by a tension of the same intensity by tying the blocks together by a series of filaments; the conditions of equilibrium will remain as before, and this block may be looked upon as being somewhat similar in its constitution to that of the hypothetical block in Fig. 2, and taking up the stress in a similar manner. Some such action takes place in every material under stress, but of its precise nature there is at present no definite knowledge.

The inclination of the plane AB may have any value. There will, however, be a particular value on which the sliding will be most intense, and is usually called the

Digitized by Google

plane on which the shear stress is a maximum. If p is equal to q the plane will have an inclination of 45°, and for other values of p and q the inclination will vary in a manner which depends on these values.

The results arrived at by the investigation from the consideration of the foregoing theory lead irresistibly to the following conclusions for isotropic materials:—

The strength to compression is greater than the strength to shear, and both these strengths are greater than the strength to tension. The tangent of angle of inclination on which the shearing stress causes sliding is equal to the square root of the strength to compression divided by the strength to tension, and the value of that shear stress is equal to the square root of the strength to tension multiplied by the strength to compression. And lastly, the strength to pure shear is equal to or greater than the strength to tension.

Let f_c be the strength of compression
f_k " shearing on the plane of sliding
f_s " pure shear
f_t " tension
and Ψ the angle of inclination of sliding

$$\text{then} \quad f_c \geqq f_k \geqq f_s \geqq f_t$$

$$\text{and } \Psi = \tan^{-1}\sqrt{\frac{f_c}{f_t}}$$

$$f_k = \sqrt{f_c f_t}.$$

By referring to the block in Fig. 2, and considering the direction of the stress to be reversed, the block would then be under a tensile stress. The particles interspersed throughout the block will not resist that stress; the filaments will carry the stress altogether. On the other hand, under a compressive stress both the filaments and the particles come into play to carry that stress, hence the com-

Digitized by Google

pressive strength would evidently be greater than the tensile strength.

The values of f_k, the shearing strength on the plane of sliding, and f_s, the pure shear strength, require some explanation. To apply a pure shear stress requires that a compressive and a tensile stress of equal intensity shall be applied to the block at right angles to one another, as in Fig. 4. Then on planes inclined at 45° the stress is one of pure shear. The most usual way of applying such a stress is by torsion, somewhat as shown in Fig. 5. On all planes perpendicular to the length of the round bar the stress is one of pure shear. If such a pure stress be applied to our hypothetical block it can be shown that the frictional resistance of the particles will be very little on the planes inclined at 45°. Hence the value of f_s, the pure shear strength, will be not less than f_t, the tensile strength, and, as a rule, will be greater, depending on the grip of the filaments and the frictional resistance of the particles. On the other hand, under a direct thrust, the value of f_k, the shearing strength on the plane of sliding, will be greater than f_s, the pure shear strength. The frictional resistance, being greater, will help to carry that stress. The author at present wishes to reserve his opinion as to whether it is possible to give an exact relation between the pure shear strength and the compressive and tensile strengths. All that can be said is that f_s, the pure shear strength, lies between the value of f_k, the shearing strength on the plane of sliding, and f_t, the tensile strength. Suppose, now, that the particles throughout the block become smaller and smaller, and eventually disappear altogether, the result would be an isotropic material somewhat of the nature of a pure metal, and the frictional resistances would disappear. In such a case the theory shows that f_c, f_k, f_s, and f_t, all become equal

Digitized by Google

to one another, and it is interesting to note that this result is verified by experiment.

The foregoing conclusions, as deduced from the hypothesis, require now to be compared with some of the results obtained from experiment. However, before doing so, it will be necessary to consider some of the tests that are usually carried out in the laboratory. Among these the strengths to tension, shear, and compression, bending and torsion tests, together with the determination of the various moduli of elasticity, are usual. Unfortunately, so far as the author is aware, a complete examination of any particular material under the majority of the tests mentioned has seldom been made, and then only in the laboratories of engineering schools. Some of the results of these tests, taken from the Proceedings of the Institution of Civil Engineers and other authorities, are hereafter referred to. There are few of them, owing to the published information being very limited. A great deal has been written, most of which seems to relate to individual tests of a particular kind, but for purposes of comparison required in this paper these do not give much information.

Of the tests the strengths to tension, shear and compression must now be considered. The usual test for the strength to tension is by a direct pull on the specimen, and for compression by a direct thrust on short blocks. These strengths can also be obtained indirectly from the results of the bending test by calculation. The results, however, differ, as a rule, considerably from those obtained from the direct tests. There are two methods of testing for the shear strength—one, already referred to, by torsion, and the other by means of shackles, as in Fig. 6. The strengths obtained, as a rule, differ considerably from each other. The stress as applied by the torsion test is one of pure shear, and the result obtained, in spite of the fact that

Digitized by Google

calculation is necessary, gives the value of the true shear strength. By means of the shackle test the material suffers considerable local distortion where the stress is applied to the pin, and the shear stress is not evenly distributed over the shearing surface, with the consequence that the shearing strengths so obtained are less than would be obtained by pure shear, as in the torsion test. This test, although very useful from a practical point of view, must be discarded when the true shear strength is required. The shear strength is also sometimes obtained from the punching test. Like as in the shackle test, the material suffers considerable distortion, giving results which are always below the true shear strength of the material.

Very few tests seem to have been made to determine the angle of inclination on which sliding takes place when the material is subjected to compression. Some few of the angles have been calculated by the formula already given, and are added for reference in the table, and in the case of cast iron the calculated value practically agrees with that given by experiment.

There are many other points in connection with the tests just mentioned that are of interest, such as the consideration of what are the true strengths of a material, and the relation it bears to the elastic constants. To fully consider these would unduly extend the scope of this paper. Broadly all that can be stated at present is that the tensile, shear and compressive strengths of isotropic materials follow the order indicated by the hypothesis that has been put forward by the author. There is some divergence in one or two cases. When, however, the experiments are scrutinised it is found that the results cannot in any way be said to be conclusive.

Digitized by Google

EXTRACTS from the "Proceedings" of the Institution of Civil Engineers, giving the strength to tension, shear, and compression on various materials.

APPLEBY, LXXIV.—

	Strength in Tons per Square Inch				Angle f Sliding
	Tension	Compression	Shear		Ψ
			by Torsion	by Shackle	
	Tons	Tons	Tons	Tons	
Cast Iron - - -	12·5	28·45	14·47	12·34	57°
Do. - - -	9·7	28·5	18·9	—	60°
Jessop's Crucible Steel -	47	36·6	44	33	—

The ratio of the length to the diameter of the blocks for the compression test was about 11·5, failure usually taking place bending. The results, therefore, give the strength for compression too low.

ASHCROFT, CXVII.—

Malleable Cast Iron - -	20·8	21·37	26·2*	—	45°

PLATT & HAYWARD, XC.—

Wrought Iron - -	21·6	—	25·2	18·76	—
Bessemer Steel - -	52·2	—	44·6	35·2	—
Landore Rivet Steel - -	28·4	—	29·8	23	—

POPPLEWELL and COKER, CXXII.—

Shafts, wrought iron, solid -	23·4	—	28·8	21·6	20·4	—
hollow	23·4	—	24·2	20·4	20·4	—
Mild Steel - solid -	25·9	—	29·1	21·8	22·4	—
hollow	25·9	—	27·5	23·1	22·4	—
Cast Iron - solid -	9·74	—	14·6	10·9	9·54	—
hollow	9·74	—	10·3	8·8	9·54	—

The two values obtained in the torsion tests were obtained by alternative methods of calculation.

KIRCALDY, 1873—

Fagersta Steel - -	39	69 to 48	35 to 40	29	52°

	Strength in Tons per Square Foot			Angle of Sliding.
	Tension	Compression	Shear	Ψ
	Tons	Tons	Tons	
BAUSCHINGER—Strength of Building Stones.				
UNWIN—The testing of materials of construction.				
Granite, Hauzenberg -	40	930	100	78°
St. Gothard -	25	720	52	79°
Passan (average)	19	850	72	81°
Limestone, Muschelkalk -	25	400	53	76°
Dolomite -	9	500	47	82°
Bunter Sandstone -	14	720	61	82°
Kenper do. -	4	290	14	77°

* Probably too high owing to method of calculation.

Digitized by Google

Having now considered the conclusions as deduced from the hypothesis, and compared them with the values obtained from various tests, it will be interesting to examine some paradoxical phenomena which occur in testing, and to see if these admit of any explanation when viewed from the standpoint of the hypothesis. It is well known that the effect of wire-drawing is to increase the tensile strength as well as the density of a wire, also that if to a wire a very gradually increasing tensile stress is applied it can be made to carry a load far in excess of its ordinary tensile strength, and that after the wire has been so tested its specific gravity is found to be increased. Is there, then, anything analogous to wire-drawing in stretching a wire? Consider the wire in its natural state, the effect of pulling and stretching it in the direction of its length would allow the filaments at right angles to contract, and the wire becomes of smaller diameter. Now, on taking off the pull the reverse operation would tend to take place. The wire, owing to the stretching, would not recover itself to its former natural state; it would be in a state of strain, somewhat the same as that produced by wire-drawing, and, therefore, should, as found by experiment, carry a stress considerably in excess of its ordinary tensile strength, and be of a greater specific gravity. The author considers that some such action takes place when testing for the tensile strength once the yield point is passed. At that part of the specimen where the contraction of the area of the cross section is increasing that wire-drawing takes place, and explains why the breaking stress is always greater than the stress at the yield point.

Professor James Thomson showed that it was possible for a shaft that had been twisted so as to suffer a permanent set to have two strengths—being stronger in the direction in which it had been twisted than in the opposite

Digitized by Google

direction. Suppose, now, a cube cut from a piece of wire that had been wire-drawn, it will be stronger to bear tension in one direction than a similar cube cut from a wire in its natural state. Would it be stronger to tension if pulled on a pair of faces at right angles to the first? The conclusion deduced from the hypothesis would be, probably, not. The cube would be stronger in one direction to tension, but weaker in other directions. These and many other interesting points may be provisionally answered when considered from the standpoint of this hypothesis. Unfortunately, experimental data are yet wanting by which they may be confirmed.

There is a vast field of experimental work yet to be done in investigating the properties of materials and in clearing up many of the seemingly contradictory results that have been obtained by different observers. The author hopes, as facilities are given to increase the equipment of the engineering laboratories, that results will be forthcoming in the immediate future which will not only go towards giving us more definite knowledge of the properties of materials, but will yield results which will prove serviceable to the engineering profession.

APPENDIX.

The theoretical relations between the tensile, shear and compressive strengths, as put forward by the author in the foregoing hypothesis of isotropic materials, may be obtained as follows:—

Consider, as in Fig. 1, a rectangular block cut across by any plane AB inclined at an angle θ, and, further, that there is a frictional resistance to sliding along that plane, then if an external compressive stress P be applied to the two end faces sliding will tend to take place on the plane

Digitized by Google

AB. To prevent this, apply the compressive stress Q at right angles to the faces AC, BD, sufficient to preserve equilibrium. Resolve these stresses along and perpendicular to the plane AB. Then if μ = coefficient of friction, and R the normal reaction on the plane AB, the equations of equilibrium are:—

$$P \sin \theta = \mu R + Q \cos \theta$$
$$R = P \cos \theta + Q \sin \theta$$

hence $\frac{Q}{P} = \frac{\sin \theta - \mu \cos \theta}{\mu \sin \theta + \cos \theta}$ and putting $\mu = \tan \varphi$

$$= \tan (\theta - \varphi).$$

If the breadth of the block is put equal to unity, and q and p are the stresses per unit area on the faces AC, BD, then $Q = qb$ and $P = pa$

$$\text{hence } \frac{q}{p} = \frac{\tan (\theta - \varphi)}{\tan \theta}.$$

It is required to find when this expression is a maximum. Differentiating and putting the result = 0 the value obtained is $\theta = \left(\frac{\pi}{4} + \frac{\varphi}{2}\right)$.

Substituting in the above equation these results

$$\frac{q}{p} = \tan^2 \left(\frac{\pi}{4} - \frac{\varphi}{2}\right) = \frac{1 - \sin \varphi}{1 + \sin \varphi}.$$

The same result can be obtained from Rankine's ellipse of stress. Thus in Fig. 1 call p and q, as before, the stresses per unit area on the faces, and resolve these stresses along and perpendicular to the plane AB, the equations obtained are:—

$$\text{Tangential stress} = (p - q) \sin \theta \cos \theta.$$
$$\text{Normal stress} = p \cos^2 \theta + q \sin^2 \theta.$$

Since no slipping takes place there is a frictional resistance on the given plane, putting $\mu = \tan \varphi$, as before, the equation for equilibrium is

$$\mu = \tan \varphi = \frac{(p - q) \sin \theta \cos \theta}{p \cos^2 \theta + q \sin^2 \theta}.$$

Digitized by Google

To find the maximum value of this expression differentiate, and putting the result $=0$, the value $\tan\theta = \sqrt{\frac{p}{q}}$ is obtained. Substituting and reducing, the verification of the preceding result is obtained:

$$\frac{q}{p} = \tan^2\left(\frac{\pi}{4} - \frac{\varphi}{2}\right) = \frac{1 - \sin\varphi}{1 + \sin\varphi}.$$

Now substitute for θ in the equation for the tangential stress in terms of p and q, and calling this tangential stress s, the equation obtained is

$$s = \frac{p - q}{p + q}\sqrt{pq}.$$

The foregoing investigation gives the relation between the stresses p and q when acting on a hypothetical block of particles having frictional resistances, and also the value of s in terms of p and q. If the particles are imagined to be smooth or to become small, and to eventually disappear, the value of p and q become equal, and s becomes equal to zero—this is the case with a liquid. It is to be noted that this equality of p and q, or, as it may be otherwise stated, the equality of action and reaction in all directions, is not only true of a liquid, but of all materials when viewed from the standpoint of this hypothesis. Thus, in the block just considered, to produce equilibrium an external stress q, together with an internal stress of $p - q$, must be applied at right angles to the applied stress p; that is, the sum of the external and internal stresses are equal to the applied stress. In other words, in a liquid the necessary reaction to the stress is applied externally, whereas in the material it is applied by itself from within. So far as the author is aware this extension of the law of action and reaction to materials has not up to the present been generally recognised.

In the case of the block already considered in Fig. 2

Digitized by Google

the expressions above have to be modified. On applying an external stress p to the end faces there is a tension p set up among the filaments, and an internal stress of $p-q$, due to the frictional resistance on the side faces. The tension among the filaments replaces the external stress, and is of the same intensity. Changing the sign of q our expressions will now become

$$s = \text{Tangential stress} = (p+q)\sin\theta\cos\theta$$
$$\text{Normal stress} = p\cos^2\theta - q\sin^2\theta.$$

As the value of the inclination of the plane AB changes the normal stress varies, and will be zero when

$$p\cos^2\theta = q\sin^2\theta$$
$$\text{or } \tan\theta = \sqrt{\frac{p}{q}} = \tan\left(\frac{\pi}{4}+\frac{\varphi}{2}\right) = \tan\Psi$$

the same value as was obtained previously, and which could have been obtained in like manner; hence the plane on which the shear stress is a maximum is the same as that on which the normal reaction is zero. Substituting in the equation for tangential stress, and reducing, there results—

$$s = \sqrt{pq} \text{ and } \theta = \tan^{-1}\sqrt{\frac{p}{q}}.$$

When the material is about to fracture the strengths must be substituted for the stresses, and accordingly the expressions become the same as those already given in the text.

THE VICE-PRESIDENT (MR. COCHRANE), said the paper was a very interesting one, and in many ways original, and the author deserved their thanks for it. It was a matter of congratulation that the testing machines of the Engineering School of Trinity College were to be made more available to the members of the profession, as the methods there are thoroughly scientific, and those who wish to make experiments in a satisfactory manner will be able to do so. Many

Digitized by Google

of the members in testing materials had to adopt rather rough-and-ready methods.

There was one part of the paper which was entirely new, and that was with regard to the hypothesis of the constitution of isotropic materials and the tests for strength that the author had dealt with. He did not know of anyone else taking this entirely original view; also the angle of sliding or inclination, which was now calculated by him for the first time. These were of great interest to engineers. He would ask some of the members to make some remarks on the paper.

Mr. Mark Ruddle said the paper was a very interesting one, but from the author's concluding remarks he was afraid they could not make much more progress without some well-equipped laboratory.

It seemed to him that the governing bodies of the educational institutions of this country were pretty well gone to sleep, and do not take much interest in engineering progress. This applies not only to testing appliances, but also with regard to teaching in general. This was in very marked contrast to what was taking place in other countries. On the other side of the water they generally had a large collection of standard engineering plant in all their educational schools. In the London Polytechnics they had several engines and plant of all descriptions for testing, &c., and all over England it was the same. On the Continent and in America there was also every facility provided for the student to experiment and test with the best available appliances. It is nearly time something was done in this country to remedy this defect, so that there would be no necessity to send their students out of the country.

He had heard some talk about Trinity College being about to do something in a small way, and spend about £2,000 or £3,000 on testing machinery. But that was not nearly enough money; if the thing was to be done properly it would be necessary to spend about £30,000 or £40,000 on the scheme.

Digitized by Google

When teaching pupils it was absolutely necessary to have proper appliances, so that practical tests could be made by the students, in order that they may be made familiar with the handling of everyday plant of up-to-date pattern, and not be condemned to the use of obsolete models.

MR. DICK said there was just one point in the paper that seemed a little confusing—namely, the nature of the difference between what was called the pure shear and the shear along the plane of sliding.

With reference to the lack of testing appliances in this country, he knew there was a great want of them, and that they were very much behind in this respect. Eleven years ago Dundee had a laboratory where practical tests could be made in every branch of the profession. Liverpool also had a splendid laboratory which cost £50,000, and was equipped with every necessary appliance, and where students could go through a three years' course.

He need scarcely say that it would be to places of this kind that the young student would go to get a practical as well as theoretical knowledge.

MR. DILLON said he was very glad this subject was brought before the Institution for the second time. Each time there was a discussion some additional information was forthcoming. He considered every effort should be made to remedy the state of things which made it necessary for them to send their sons to England or foreign countries to obtain a technical education, there to pay large fees without any certainty of work on the completion of their technical training.

He considered the Government should do something in the way of providing appliances for a successful technical training. He was glad to be able to state that there was about to be a change in the policy adopted by the Government, and they were at present completing arrangements for the construction of some new buildings in Upper Merrion-street, which would

Digitized by Google

be fitted with mechanical appliances on a very large scale, which would probably mean an expenditure of over £20,000.

He considered they ought to put on all the pressure they could, so that whatever is undertaken would be of a practical kind, and on a sufficiently large scale to be useful to this country.

Mr. Purcell said most of the statements made by the speakers had been an attack upon the Engineering School of Trinity College, and was most unfair, as this school had kept engineering alive in Ireland. It had given them nearly all their Presidents. It had given them some of the foremost engineers in the world. He considered Trinity College should not be black-beaned in that manner because she had not several engines and machinery. Machinery only appealed to the mind which could not grasp the inwardness of science. If the student had not brains enough to understand what he was taught without the aid of a model, no amount of machinery will ever teach him his business.

Mr. Basil Hope said he had long experience of engineering work, and he considered it essential that every young man should learn his profession by a practical study in the workshop, in addition to a thorough theoretical knowledge of all branches, which might be learnt at the same time in some technical night school.

With regard to the strength of materials in construction, he would like to remark that a good many mechanical engineers only specified mechanical stresses, and did not include any chemical test; and this might profitably be considered in connection with galvanic action in plates of steel boilers, and proportions of arsenic in the plates of copper fireboxes.

Mr. G. T. M'Caw said that the question of laboratories for the investigation of matters such as that dealt with in the paper was of especial interest to the Institution, which

Digitized by Google

might be the means of drawing the attention of educational bodies, such as the Board of Trinity College, to the pressing need for their establishment.

THE VICE-PRESIDENT (MR. COCHRANE) said in the discussion of the paper the members had wandered a great deal from the subject before them. The paper was upon the strengths of materials, but most of the remarks had been about Trinity College and the education of engineers, which were totally different things.

Most of them were aware that all Trinity College could be expected to do was to give a good theoretical education to qualify the student to enter a workshop or office, and become a pupil of some practical engineer. But if anyone expects that the three or four years' course at college could make a youth a practical engineer they were mistaken.

The remarks of most of the speakers would tend to show that there is a necessity for a good Technical School for Practical Engineering in this country, but that, he thought, should not interfere with the work Trinity College had to do in providing university education for young men entering the profession, as no one would say that a good university education was not a very considerable advantage.

MR. LILLY, in replying, said he was sorry that there was not more discussion on the subject of his paper. The paper itself was more or less a novel one, and he had hoped that some of the members would have had something to say with regard to the theory he had advanced; but as no one had done so, he felt that they were in agreement with him.

Some remarks had been made with regard to the strength of bricks tested by this theory. A brick which stood a good tensile stress would be a good brick. This the author hoped to be able to show later on experimentally. He had already satisfied himself in the case of cements that the tensile stress was a direct measure of the compressive stress it would stand.

Digitized by Google

Mr. Dick had mentioned pure shear and the plane of sliding. In pure shear the material was stressed similarly as in torsion; the plane of sliding had reference only to the plane on which fracture took place under a direct compressive stress.

Mr. Hope had remarked that chemical tests as well as mechanical tests should be specified. For general purposes he was not in agreement with him, as the engineer was not curious to know what his materials were made of, but would they stand what was required of them, and the mechanical tests were sufficient for that purpose. In particular cases the chemical test might be useful, but it was not to be generally recommended.

He hoped the hypothesis put forward would form some guide to engineers in estimating the strength of materials. Pure theory by itself was not to be commended unless verified by experiment, and he had shown that experiment was wanting, but, so far, it was in favour of the hypothesis.

With regard to schools of engineering and their equipment, testing machines were a necessity, and no school was complete without a certain number of them, and he hoped the Laboratory Engineering School of Trinity College, now in course of erection, and with which he had the honour of being connected, would in the future be well equipped for the carrying out of original work in this respect as well as for the education of the engineering student.

Digitized by Google

[7th May, 1902.]

MR. JOHN H. RYAN, President, in the Chair.

Before entering upon the ordinary business of the meeting MR. W. H. MILLS asked permission to say a few words upon a subject which he was sure was present before the minds of the whole of them that evening. He alluded to the death of one of their old Members, Mr. W. W. Wilson, which took place on Saturday last. The late Mr. Wilson was a very old Member of the Institution, being associated with it for 27 years. For some years he was a Member of the Council, and for two years he was their President. All those who were associated with him at the time knew what an interest he took in the work of the Institution. He was always desirous to assist in any way he could the Members, or anyone else connected with the Institution. When the scheme was brought forward for building the Hall and Council Chamber he spared no time nor energy in carrying out the work. He helped in the preparation of the drawings, and like many others he assisted liberally with money to defray the expenses of the undertaking. They must always feel that they were largely indebted to him for the satisfactory way in which they had been able to occupy their present position.

He begged to move the following Resolution; also that a copy of it be forwarded to Mrs. Wilson and her family, and that it be duly entered in the archives of the Institute:—

"The Institution of Civil Engineers of Ireland have heard with much regret of the death of Mr. W. W. Wilson, Past President of this Institution, and Member of the Institution of Civil Engineers of England. Mr. Wilson was associated with the Institution of Civil Engineers of Ireland for the past twenty-seven years, always displaying and taking great interest in its

Digitized by Google

welfare, as evidenced by the Lecture Hall and New Library, both of which he, in a great measure, was instrumental in the carrying out and completion of. The Institution respectfully tender to Mrs. Wilson and the members of the late Mr. Wilson's family their sincere sympathy with her and them in their bereavement."

MR. M. PURCELL in seconding the Resolution, said the late Mr. Wilson was always a gentleman to his profession, and never begrudged giving the full and entire knowledge that he had at his disposal to any brother Engineer in any position, whether the young rising student, or the full blown Engineer.

All people who knew the late Mr. Wilson would deeply regret his demise, which was so sudden, so unexpected, and was such a great loss to all his fellow-engineers, and to this Institution in particular.

MR. JAMES DILLON in supporting the Resolution, said he knew the late Mr. Wilson personally for a great many years, and he had scarcely ever met him that he did not take the opportunity to speak about some matter connected with the Institution.

Recently he had not been able to take the same active part that he had done in former years, and he was sure Mr. Wilson felt it very much that he was unable to attend their meetings as often in late years as he did formerly.

THE PRESIDENT put the resolution to the meeting, and it was unanimously adopted.

The following candidates were balloted for and duly elected, viz. :—

MR. J. A. MAXWELL STIRLING, as Member, and Messrs. AUGUSTUS DE ROHAN GALBRAITH, JOSEPH PONSONBY MAGILL, PAKENHAM T. STEWART, CHARLES B. CLANCY, and NIL KRISHNA SEN, as Associate Members.

Digitized by Google

"Refrigeration," with Special Reference to the Dublin Pure Ice and Cold Storage Company.

By Mr. F. W. Higginbotham, Associate.

The subject of refrigeration plant has attracted a great deal of attention now that it has established its supremacy as the best means of importing and storing perishable food stuffs, in the economical manufacture of pure artificial ice, and as a valuable adjunct in many home manufactures.

"Refrigeration" is definable as the process of abstracting heat—and the efficiency of all refrigerating plant depends on their power of abstracting it, coupled with its removal. The fact that gases when compressed evolve heat and re-absorb it on expansion constitutes the principle on which modern refrigeration machines are constructed. In such machines a suitable gas is drawn into a cylinder, called the "compressor," and there compressed by a piston. The gas is then delivered in a highly condensed and warm state into a coil of tubing immersed in running water, called the "condenser," which absorbs the heat rejected in compression. The length of this tubing is so adjusted that the compressed gas is almost liquid when it reaches the end of the coil. This liquid, in endeavouring to expand to the gaseous state, must re-absorb heat, and the process of expansion or evaporation is made to take place either in a coil of tubing immersed in brine, or, in some cases, the evaporation is made to take place in tubes situate in the chamber desired to be cooled.

The gas being in either case re-drawn into a cylinder, compressed, and the cycle continued indefinitely, the gas may, therefore, be regarded as the medium by which the heat of the substance to be cooled is transferred into water, which is preferably let run to waste. The quantity of

Digitized by Google

water required is usually very large—the amount being dependent upon its initial temperature; but upon the quantity of cooling water available depends the degree of success in ordinary installations. The Dublin Pure Ice and Cold Storage Co. were exceptionally fortunate in securing an abundant water supply free of cost owing to the situation of their premises. As the supply of the necessary cooling water, even at very low rates, makes a considerable item in the expenses of almost every similar concern, and where water is scarce or dear, various expedients have to be adopted to remove its heat in order to re-use it. Thus the advantage of water in abundance can be readily understood. For the manufacture of ice, the cold brine is led from evaporator in carefully insulated pipes, to large tanks, also specially insulated, in which the brine circulates around moulds filled with fresh water. This water must be kept agitated during the process of freezing, otherwise it will not part with the air it usually contains, and the resulting ice would be very opaque. Another means of obtaining clear ice is to use condensed water for filling the moulds instead of fresh.

In the construction of cold stores great care must be taken with the insulation, as on this depends the efficiency of the plant, and the best insulation is true economy.

The usual method adopted is to form an outer skin of 1½ inches, or thicker, tongued and grooved boarding on suitable framing, and at about 6 inches to 1 foot 0 inches away form a similar partition, the intervening space being either filled with charcoal, slag, wool, or some similar non-conducting material—this insulation forming the lining of the cold stores. Suspended from the ceilings of each compartment of the cold stores are "brine drums"—*i.e.*, iron cylinders of about 14 inches diameter by 8 feet long, into which the cold brine is led from the brine mains.

Digitized by Google

These drums act as absorbers of heat, and the large bcdy of cold brine held by them is a great advantage in maintaining an even low temperature. Brine grids are sometimes used, and consist of a series of small tubes, 1 inch diameter, framed together on the ceilings or walls of cold rooms. Pipes about 4 inches diameter were most commonly used a few years ago, but the drums now appear to find most favour. Cold stores are often cooled by the cold air system, either in conjunction with the brine circulation system or independently thereof. The cold air is produced by causing a current of air at normal temperature to circulate through a chamber containing a series of pipes in which very cold brine is circulating. The air thus chilled is drawn into insulated wooden flumes which traverse the series of cold stores—openings regulated by slides being left in each store. Along the opposite side of said stores are run the return flumes, and the temperature of each store is regulated by the relative amount of open slide in both go and return flumes.

The entrance to cold stores must never be direct from the outside air. Air locks are always provided, into which the goods are first brought from outside, and in these air locks they receive a preliminary chill before being brought into the cold stores. When first brought into these stores, the brine circulation or cold air is turned on so as to bring down the temperature, and so get rid of all latent heat in the substance to be stored. When this is removed, then the temperature is let remain nearly constant for storing purposes. The cold air chill is the best for fresh meat, besides which it removes any odours.

The plant adopted by this company was that of Messrs. Hall, of Dartford, in which carbon dioxide is the gas used. Although many prefer machines using ammonia, yet carbon dioxide has its advantages—one of which is that in

Digitized by Google

case of a leak or burst the escape of carbon dioxide is not so liable to be dangerous to life as is ammonia—carbon dioxide being, therefore, considered the safer reduction agent. In the cylinder the gas is compressed by the up stroke of the piston. The thus generated heat is parted with in the condenser to the water, and the carbon dioxide is allowed to re-expand in the coil of tube, which is immersed in brine. In this expansion it abstracts heat from the surrounding brine, the gas being again drawn into the compressor, and so on in a continuous cycle. The plant employed in the Dublin Pure Ice Company consists of two 12-ton carbon dioxide compressors, driven by two 69 h.-p. Stockport gas engines and 79·6 h.-p. turbine. The gas used is made in a gas producer on the premises. Gas engines and producers were adopted in accordance with the latest American experience. Crude producer gas and gas engines are far more economical than steam plant for intermittent use, especially where employed in conjunction with the water-power. The gas plant has the advantage over steam of being instantly started and stopped without the waste of fuel consequent on banking down boilers (steam) or getting up steam—there being always enough gas in reserve in the gas-holder to drive the engine for some time until more is produced. Anthracite is the coal used, and very little smoke is given off.

At the right hand side of the engine-room are the gas engines, driving on to an overhead shaft running centrally down the building. This was in order to get sufficient belt drive, and to suit the turbine rope drive connection. From this shaft are driven the compressors which appear on the left side of the view. Here the carbon dioxide is compressed to 50 atmospheres. It flows through the pipes to the condensing tanks, in which water is circulating, thence to the evaporator, from which the brine is being constantly

Digitized by Google

circulated through the ice factory and coal stores. Brine enters 27 and leaves about 18·5° Fah.

The ice factory is a large room, 28 ft. by 65 ft., formerly the malting kilns of an old brewery. The floor of factory was first covered with concrete sufficiently thick, then an air space, and over this an insulated floor, composed of boards, 12 inches of silicate cotton and heavy flooring, on which, on the left side, were placed the can tanks and on right the cell tanks.

In the can tanks ice is manufactured by the immersion of sets of cans containing pure water into a large tank of brine in a state of circulation. The ice forms on the inner sides of the cans and gradually thickens to the centre. The process takes about 26 hours. All artificial ice would contain a large amount of air, but it is abstracted by a system of agitating the water while being frozen, thereby getting rid to a great extent of this air. For can ice an arrangement of pneumatic pumping is used. The wood nozzles are allowed to dip slightly into the centres of the cans, and a pumping action goes on through them—they being all connected up to an air pump. When the cans are frozen they are lifted out of the brine tank in sets by a gantry travelling overhead, which carries the set to the end of the room, and dips them into a tank of hot water, thereby loosening the blocks of ice from their sides. The moulds are again lifted and tipped on to the platform, where they go by lifts to the ice store or for direct delivery to the public. Vartry water alone is used for the ice made here; it costs 6d. per 1,000 gallons. Therefore, as a ton of ice contains 35·9 cubic feet=224 gallons, one ton costs, roughly speaking, 1½d. Each block weighs about 1¾ cwt., and measures 3 ft. 6 in. by 15 in. by 10 in. The right hand side of the factory contains the cell tanks—a somewhat different system. The ice made by it is considered much

Digitized by Google

superior to the can ice. The space, 59 ft. by 10 ft. 9 in., is divided into a number of cells with passages between and under each for brine circulation. The pure water in these cells is agitated for the purpose of freeing the contained air, during freezing, by means of paddles, and rope toggles are frozen into the blocks for lifting. When the blocks, measuring 4 ft. 9 in. by 2 ft. 6 in. by 12 in. or 10 in., are completely frozen the brine is drained out of the passages and hot steam or water admitted in its stead, thereby loosening the block of ice. The gantry is then moved over the block till its hooks are inserted in the rope toggles, and the block lifted and conveyed to its destination. This cell ice takes about 40 hours to form, and should be produced at 9s. per ton.

Cell ice is more dense than can. It contains less fixed air, but is much slower to freeze, and somewhat more expensive to manufacture. A curious fact is that ice made below 18° Fah. is so brittle that it is impossible to handle it, and every care is taken to prevent the forming temperature ever going below this figure.

The cold stores consist of, on the ground floor, 15 rooms for the use of butchers, poulterers, &c., and have been taken full advantage of by the public (a prominent Dublin citizen having discovered their utility also for horticultural purposes). The other floors of this large building are occupied by foreign meat companies as stores for an entire cargo of meat at a time.

This building (an old mill) has exceptionally thick walls and vaulted floors, but is also insulated throughout by 12 inches of silicate cotton over all floors, ceilings and walls.

The cooling is performed by duplicate systems—air cooling, brine grids and drums. These latter are, as before described, a series of galvanised iron cylinders, about 14 in. diameter by 8 ft. long, suspended from the ceiling of each room. They

Digitized by Google

contain a large amount of brine in circulation, when it is required to cool the rooms, but ordinarily the cold air system being used, they act as cold accumulators. The cold dry-air system is the best known for keeping provisions. Its plant is situated on the second floor of this building, and consists of a large thickly-insulated room containing several miles of small tubes conveying brine in a state of rapid circulation. The air is made to circulate amongst these pipes by a Stutevant fan absorbing 5 h.-p., and is then conveyed at a temperature of 12° through insulated wooden flumes to the various chambers, entering each by an orifice in the flume, regulated by a slide. A return flume having openings also to each chamber, conveys the air back to the cooler.

In storing goods, the owner—having first arranged for his chamber, and receiving the keys thereof—deposits the goods on rubber-tyred lorries which are run into a primary cooling chamber, or air-lock, where they are subjected to the action of cold air until partly freed of their latent heat. They are then deposited in their owner's pre-arranged chamber. These chambers are grouped in sets opening off the air-locks. Each chamber has its own thermometer, all of which are electrically connected up to the offices, so that the manager can see at a glance how all the cellars stand.

The water-supply used for cooling and power is derived from the Poddle and Camac Rivers, which converge into a large pond covering about 1 and 1½ acres at the rere of the premises, and the fact that the water comes into the pond through tunnels under miles of the city is very favourable to its use as a cooling agent.

There is a drop of 14 feet from surface of pond to surface of tail race, and the water actuates a Little Giant turbine, 36″ diameter, which, under the head of 17 feet, is guaranteed

Digitized by Google

to give 79·6 h.-p. on full gate, using 2,800 cubic feet of water per minute.

The cooling water is circulated from the pond partly by gravity and partly by rotary pumps, but it can be circulated solely by gravity. The entire factory is lit from two similar Taunton dynamos, driven off main shaft, the insulated wires from which are cased in iron tubes wherever situate inside any building, and the incandescent lamps are cased in double glass envelopes. The yards and ice factory are lit by 1,000 c.-p. arc lights.

The upper floors of the cold stores are reached from lifts, each capable of raising 1½ tons each time. These lifts are placed on the exterior of the stores, in order to obviate cutting and save floor space, the goods discharge on each floor into air corridors opening to all the rooms. The first floor rooms contain 16,320 cubic feet, which hold 1,873 carcases. Sheep are generally stored here at 17°. The second floor has 8,500 cubic feet available for storage, and holds about 350 carcases of beef. The top floors contain rabbits, poultry, &c., in large consignments.

The ice stores occupy another building. The floors are water-proofed, and besides the ice manufactured large cargoes of Norway ice are stored here, as many customers prefer this to the artificial material, which, however, is certainly much the purest. The total ice storing capacity is 5,000 tons, and only about 1,400 tons of Norway ice is usually stocked.

This factory being placed so centrally in the City of Dublin, and enjoying such great advantages of water-supply, &c., is probably the best instance, from a profitable point of view, of such a concern in the United Kingdom.

THE PRESIDENT (MR. J. H. RYAN) said he was sure they would all join him in thanking the author for his paper,

Digitized by Google

which he had so kindly favoured them with. The subject of the paper, "Refrigeration," was, of course, a much larger subject than the author had dealt with. He had confined his subject chiefly to a description of the Dublin Pure Ice Co.

Refrigeration was a subject of extreme importance, and of interest to the profession as in some constructive works it took a very prominent part—such as shaft sinking and tunneling work. It also showed how the forces of nature can be rendered useful to the service of man.

Unfortunately the author missed his opportunity of treating the subject on this broad basis. The description he gave was, no doubt, of an excellent commercial undertaking. But whether the works exhibit any particular novelty of principle or design he was not sufficiently versed in the process of cold storage to say.

Mr. Purcell said the author had described a very successful factory here in the City of Dublin. He wished they had many more similar establishments. It was one of the best-equipped factories of its kind for its size that he had seen.

He had had a very large experience of this class of work in dealing with the frozen meat trade, and with regard to the refrigeration connected therewith. He must certainly say that in this particular factory Messrs. Hall, Bradford, and Messrs. Godfrey had done their level best, and they had produced something which this city might very well congratulate itself on.

The author had given them a description of the factory, and a very short account of what refrigeration is. He presumed the author gave this short account because he took it for granted that all the members of the Institution were perfectly well aware of the principles and practice of refrigeration.

He had some experience in these matters, and went there hoping and expecting to get some information on the subject

Digitized by Google

that he had not before, and he was sorry to say he was disappointed.

Some five years ago there was a storage building put up in Cow Cross-street, near Smithfield Market, London, which was to deal with 5,000 carcases a day.

Cold storage engineers were asked to deal with the question from a scientific point of view. The promoters said they wanted machinery that would freeze so many hundred carcases; but he said what he wanted was machinery that would give them so many thermal units of cold, and when they had that they could deal with any position they wanted to take up.

He had spent nearly two days sitting with these gentlemen trying to convince them that the thermal units of heat were inversely the thermal units of cold minus friction and transmission. He succeeded in persuading them, and the result was the construction of probably the first cold storage thermal tank in the whole of London; now there are hundreds.

They knew the energy of the engines, the coal expenditure, the boiler production, the compressive power; and given these, they were able to predicate the number of thermal units at the other end and in the tank.

This Dublin company had two 69 h.-p. Stockport gas engines and one 79·6 h.-p. turbine, and he wished to know what energy was developed? What was lost in the compressors? What was lost in transmission? What was the actual amount of water used for the purposes of condensation?

These were practicable tangible objects which appealed to every member of the Institution. They were the things which would help them to design and reproduce, if they were correct. Given so many pounds of coal, how many thermal units of cold can be got in the factory?

Refrigeration had come to stay. It was one of the greatest factors probably with which engineers to-day had to deal.

Digitized by Google

Without it lyddite could not be manufactured, and chocolate could not be supplied as cheaply as it was. These were all the effect and the result of refrigeration. They were only on the fringe of what that power was going to do, and what the result was going to be.

Some two and a half years ago in London it was announced by a large refrigeration company that they were in a position with 1 h.-p. to generate 10 h.-p. of compressed energy, and so with 10 h.-p. you could get 100, with 100 a 1,000, and so on.

Somehow he had never seen any demonstration of this ever-enlarging power, nor had he been fortunate enough to meet any engineer who had. One thing was certain, refrigeration was at present only in its infancy, and any of them who could add anything towards its more simple and cheaper production would have materially helped to solve the problem of food storage.

Mr. Lilly congratulated the author on the successful manner with which he had illustrated the subject of his paper.

The up-to-date arrangements that had been made by the Dublin Ice Co. for the economical production of ice, and the skilful way in which they had utilised the old brewery for this purpose evidently showed that careful consideration had been given to the selection of suitable plant for their requirements.

He considered they were right in adopting the Dowson gas producer and gas engines for this purpose. The demand for power being intermittent, and varying according to the time of year, would give the preference both for economy and ease of working to the plant they had put down in preference to the steam engine.

With regard to refrigeration, the author had only given a description of the system in use by the Dublin Ice Co., and made comparisons with other systems, of which there were

Digitized by Google

many, each having some special advantages of its own. In Hall's system, which had been described, carbon dioxide was the working agent, and provided no leakage took place had no doubt proved itself to be very successful. The dry-air system, introduced by Haslam, of Derby, had, however, some advantages in this respect, the air after leaving the machine being at atmospheric pressure. On the other hand they had to contend with the difficulty of getting rid of the snow precipitated from the air, and which, under certain circumstances, became deposited in the cylinder, with the result that the cylinder covers were sometimes forced off. To prevent serious damage being caused by this, the nuts holding on the covers were lined with white metal, which gave way under impact, and prevented the covers fracturing.

Another system was that of using ammonia as the working agent. One great objection to it was the smell, and the danger caused from the bursting of any of the pipes containing the ammonia. He remembered being on a steamship that had this plant fitted in the engine room, and on the bursting of one of the pipes, the staff had to clear out to escape suffocation.

Some years ago he turned his attention to the invention of a machine for refrigeration purposes without the using of cooling water. At first sight this would seem to be impossible, but he had invented a refrigerator which would do this; unfortunately it was somewhat bulky in its dimensions.

There was another point which had been referred to by previous speakers and which he would like to touch upon, and that was with regard to the efficiency of the whole plant. They knew approximately the efficiency of the Dowson gas producer and gas engine, and what power was obtained; this was utilised in the compressor, and if the efficiency of that part of the plant were obtained a little calculation would give them a measure of the efficiency of the whole plant.

Digitized by Google

It would be interesting if this could be obtained, and valuable for purposes of comparison.

MR. J. T. JACKSON said, with reference to what the author had stated about the ice being brittle when rapidly frozen, he considered that this was due to the great difference between the temperatures of different portions of the block of ice at the moment of completion of freezing. Subsequent equalisation of temperature throughout the mass of the block would have the effect of setting up severe strains in the interior owing to the expansion of the outer portions as they rise from their previous low temperature to 32° F.

MR. HIGGINBOTHAM, in reply, said no doubt it would be useful information were he able to inform them of the full details showing actual cost of ice manufacture; in this instance he regretted that he had not yet sufficient recorded data to enable him to compute it. They must recollect that the power here was utilised for many other purposes as well as ice making. One point was certain, and that was that the actual cost of ice production was a very variable quantity, being greatly dependent on whether the ice plant was running full load or only partly used; the cost came down enormously proportionately as the amount made at one filling was increased. We must also remember that a very important factor in its cost is the temperature of the cooling water, which would vary several degrees during one day. He could assure them, however, that the estimates of production were most fully gone into by him prior to the formation of the Company, and these were compared with the returns of several other similar concerns. The most important fact really was that the Directors are highly pleased with the financial results; the reason of these being so good, in the author's opinion, is very largely due to the suitability of the site with its ample water supply, the selection of which had been entrusted to him.

Digitized by Google

No doubt it would be well worth while to trace the absorption of power in the various departments of the business, and when time permitted he would systematically investigate this subject.

Referring to the Chairman's remarks he would state that this paper was intended more as a description of the Dublin company's installation than a description of refrigeration in general.

Several speakers had referred to systems other than Messrs. Hall's; but in his opinion he had chosen, after deep investigation, that which he considered most suitable, and he was still of opinion that Hall's system could not be bettered for such works; he would prefer not to risk using ammonia in such a public place as a cold storage concern.

Compressed air machines were even now in use for special purposes; he saw several in construction a year ago, but they were admittedly not so economical as either ammonia or carbon dioxide. He hoped that the paper would bring forth one especially dealing with the history of the evolution of such machines, which would not fail to be most interesting, as from his experience he could say that all the early plant he came across had been highly ingenious.

Digitized by Google

Publications received in exchange for Institution Transactions.

Engineering.	The British Architect.
The Engineer.	The Timber Trades Journal.
The Builder.	The Indian Engineer.
The Contract Journal.	Indian Engineering.
The Surveyor.	Caissier's Magazine.
Traction and Transmission.	Engineering Magazine.

Railway and Tramway World.

The Volumes of Transactions are exchanged with the following Institutions, &c. :—

American Academy of Arts and Sciences.	Boston.
American Society of Civil Engineers.	New York.
American Society of Mechanical Engineers.	New York.
Canadian Society of Civil Engineers.	Montreal.
Canadian Institute.	Toronto
Civil Engineers of Italy.	Rome.
Engineers' Association of New South Wales.	Sydney.
Engineers' Club of Philadelphia.	Philadelphia.
Franklin Institute.	Philadelphia
Institution of Civil Engineers.	London.
Institution of Mechanical Engineers.	London.
Institution of Engineers and Shipbuilders in Scotland.	Glasgow.
Junior Institution of Engineers.	London.
Liverpool Engineering Society.	Liverpool.
Manchester Association of Engineers.	Manchester.
Midland Institute of Mining, Civil, and Mechanical Engineers.	Barnsley
North of England Institute of Mining and Mechanical Engineers.	Newcastle
North Staffordshire Institute of Mining and Mechanical Engineers.	Stoke-on-Trent.
Nova Scotian Institute of Science.	Halifax, N. S.
Royal Engineer Institute.	Chatham.
Royal Institute of British Architects.	London.
Royal Scottish Society of Arts.	Edinburgh.
Royal Society of Antiquaries of Ireland.	Dublin.
Smithsonian Institution.	Washington.
Sociedad Cientifica Argentina.	Buenos Ayres.
Society of Arts.	London
Société des Ingénieurs Civils.	Paris.
Surveyors' Institution.	London.
West of Scotland Iron and Steel Institute.	Glasgow.
Western Society of Engineers.	Chicago.

Digitized by Google

REPORT OF COUNCIL FOR 1901–1902.

THE numbers of Members, &c., at the close of this session as contrasted with the previous one are:—

		Members	Associate Members	Associates
1901–2	-	141	37	54
1900–1	-	138	24	63

The presentation of this Report upon the state of the Institution will, the Council feel sure, afford gratification to all connected with it, showing as it does the great increase in Members and Associate Members, as well as the increase in the number of Papers submitted and approved of by the Council for reading and discussion at the sessional meetings; and the Council hope that this latter will be maintained in future sessions, and that the Institution as a whole will continue to further the interests of the Engineering Profession in Ireland by contributing Papers as well as taking part in the discussions, which latter tend to render the record of such Papers in the Transactions more valuable to the profession at large, as well as to those of the general public who may from time to time be called upon to refer for precise information on the subjects treated upon.

The Council had to deal, perhaps stringently, with the arrears into which the annual subscriptions had fallen, but they are sure that the improvements in connection with the Reading Room and Library, and the arrangements made by them, by which both are available in the evenings during the session, will explain how incumbent it was that they should exercise the power given by the By-laws.

Digitized by Google

The Council have adopted a new form of Diploma for Members and Associate Members, and these were sent out to all who had not previously received such evidence of their connection with the Institution.

The Council have awarded the following prizes:—

A Mullins Silver Medal to Mr. Joseph Tatlow, Associate, for his Paper on "The Progress of Irish Railways during the Last Decade of the Last Century."

A Mullins Silver Medal to Mr. W. E. Lilly, Member, for his Paper on "The Strengths of the Materials of Construction," read before the Institution, April 2nd, 1902.

The thanks of the Institution to Mr. F. W. Higginbotham, Associate, for his Paper on "Refrigeration."

It being contrary to custom to award medals or premiums to members of Council, the thanks of the Council were tendered to Mr. M. Ruddle, Member of Council, for his Paper on "Electrical Transmission and Transformation of Energy;" and to Mr. Fred. J. Dick, Member of Council, for his Paper, "The Design of Breakwaters."

The Council have also to record the visit of the Members to the power station of the Dublin United Tramways Company at Ringsend, which was rendered most interesting and pleasant by the arrangements made by the Chairman, directors, and other officials of that Company—to all of whom they tender the thanks of the Institution.

The annual dinner of the Institution took place in the Shelbourne Hotel in November, the success of which, the Council feel assured, the Members will with them consider it is unnecessary to record, and on behalf of the Institution tender their thanks to those members who undertook the

Digitized by Google

arrangements in connection with it, more particularly Mr. George M. Ross, Member of Council, who acted as Hon. Secretary of the Dinner Committee.

The Council have much regret in recording the loss the Institution has sustained by the deaths of Mr. W. W. Wilson, Past-President; Professor G. F. Fitzgerald, F.T.C.D., Hon. Member; Mr. Martin Atock, ex-Vice-President; and Mr. William J. Haslam, Member.

The following Papers were read during the session 1901–2 :—

Dec. 4th, 1901.—"The Progress of Irish Railways during the Last Decade of the Last Century," by Joseph Tatlow, Associate.

Jan. 8th, 1902.—"Electrical Transmission and Transformation of Energy," by Mark Ruddle, Member of Council.

March 5th, 1902.—"Notes on the Design of Breakwaters," by Fred. J. Dick, Member of Council.

April 2nd, 1902.—"The Strengths of the Materials of Construction," by W. E. Lilly, Member.

May 7th, 1902.—"Refrigeration, with special reference to the Dublin Pure Ice and Cold Storage Co.," by Frederick W. Higginbotham, Associate.

Digitized by Google

AUDITORS' REPORT.

TRINITY CHAMBERS, 40 & 41 DAME-STREET,
DUBLIN, 21*st March*, 1902.

THE COUNCIL OF THE INSTITUTION OF CIVIL ENGINEERS OF IRELAND, DAWSON-STREET, DUBLIN.

GENTLEMEN,—We have completed the audit of your Books and Accounts for the year ended 31st December, 1901, and annex Revenue Account and Balance Sheet made up to that date, duly certified by us.

We have verified the subscriptions and the entrance fees by examination of the counterfoils of the receipts issued.

We have seen that the rents from tenants have been brought into the Accounts, and we have also seen that the dividends on the investments have been duly accounted for. The expenditure has also been vouched to our satisfaction.

The balance in the Revenue Account shows an excess expenditure over income of £151 8s. 8d., but this is after charging a sum of £187 14s. 11d. for furniture, painting, &c.; and you will also notice that the expenditure on printing, stationery, &c., was exceptionally high in the year under review.

BALANCE SHEET.

The liabilities we obtained from a list prepared by the Secretary, and in addition in nearly every case we saw the accounts furnished by the creditors.

The subscriptions in arrear amount to £90 6s., and this

Digitized by Google

figure is after having written off £76 7s., the details of which are set forth in the Revenue Account.

We have obtained certificates from the Bank of Ireland that the stocks are standing in the names of the Trustees of the Institution.

Cash in bank we have verified by an examination of the pass book.

We are,

Yours faithfully,

CRAIG, GARDNER & CO.

Digitized by Google

THE IND.

Dr. Cr.

EXPE					
		d.	£	s.	d.
To Printing, Stationery,			36	15	0
Paid .					
Due this date	7	6			
	2	0			
Less due Decembe	9	6			
	8	0			
„ Rent of House—					
Paid (less taxes)	1	6			
Due this date (less					
Less Due Decembe					
„ Rates, Taxes, Repairs					
Paid .					
Amount in advance					
Due this date	6	0			
	7	6			
Less due Dec., 190	0	6			
Proportion pai			214	7	0
in advance					
	0	0			
	0	0			
„ Expenses of General					
„ Salaries, Fuel, Light,	0	0			
Cleaning .	3	8			
„ Expenses of Annual D			164	16	4
Paid . .					
Due this date .	9	4			
	9	2			
„ Furnishing, Painting,					
„ Auditors (Accounts fo	8	6			
„ Law Costs, due this d	0	6			
„ Bank Cheque Book .			37	18	0
			10	0	0
			1	12	6
			465	8	10
	come		151	8	8
	tal, £		616	17	6

Digitized by Google

/IL ENGINEERS OF IRELAND.

ıde up to 31st December, 1901.

d.	LIABILITIES.	£ s. d.	£ s. d.
	By Sundry Creditors—		
	Accrued Rent . . .	22 15 0	
	Repairs and Taxes . .	18 12 1	
	Printing and Stationery . .	68 7 2	
	Annual Dinner Expenses .	6 18 1	
	Law Costs . . .	9 12 4	
			126 4 8
0	„ Surplus to the credit of the Institution at 31st		
3	December, 1901, exclusive of value of Premises, Library, Furniture, and Fittings, and before providing Reserves for Subscriptions in arrear		
7	as per last account .	1,859 10 2	
3	Less Rebate to Photographic		
0	Society for 1900 . .	5 0 0	
2			
0		1,854 10 2	
	Less Debit Balance of Revenue		
11	Account for 1901 . .	151 8 8	1,703 1 6
2	Total, £		1,829 6 2

Balance Sheet, compared same with the Books and Vouchers of the

CRAIG, GARDNER & Co., *Auditors.*

Digitized by Google

LIST OF MEMBERS.

INSTITUTION

OF

CIVIL ENGINEERS OF IRELAND

Established 1835 (Incorporated by Royal Charter, 1877),

35 DAWSON-STREET, DUBLIN.

1902.

COUNCIL.

President:

JOHN HENRY RYAN.

Vice-Presidents:

ROBERT COCHRANE, | WILLIAM ROSS (*Hon. Treas.*)

Other Members:

WM. ANDERSON,
FRED. J. DICK,
JOSEPH H. MOORE,
GEORGE M. ROSS,
MARK RUDDLE,
SAMUEL J. SHANNON,
PROSSER A. H. SHAW,
RICHD. O'BRIEN SMYTH.

Past Presidents:

BINDON B. STONEY,
CHARLES P. COTTON,
ALEX. M'DONNELL,
WILLIAM H. MILLS,
JOHN A. F. ASPINALL,
JOHN P. GRIFFITH,
SPENCER HARTY,
THOMAS F. PIGOT,
JAMES DILLON,
W. W. WILSON,
EDWARD GLOVER.

Honorary Secretary:

MARMADUKE BACKHOUSE.

Bankers:

ROYAL BANK.

Digitized by Google

Members are requested to inform the Honorary Secretary if any correction be necessary.

HONORARY MEMBERS.

(*Hon. M.Inst.C.E.I.*)

ELECTED		
1868 M 1882 H.M.	Grubb, Sir Howard, F.R.S., F.R.A.S., &c.	51 Kenilworth-square, Rathgar, Dublin.
1897	Cameron, Sir Chas. A., C.B., M.D., F.R.C.S.I. . . .	51 Pembroke-road, Dublin.
1901	Thrift, Professor W. E., F.T.C.D.	Trinity College, Dublin.

MEMBERS.

(*M.Inst.C.E.I.*)

1901	Allanson-Winn, Rowland Geo. A., B.A., Cantab.	22 South Frederick-st., Dublin, and Glenbeigh, Killarney.
1892	Alexander, *Professor* Thomas, M.A.I.	39 Trinity College, Dublin.
1898	Allen, Henry	Rehoboth House, South Circular-road, Dublin.
1869 F.L.A. 1875 F.L.M.	Apjohn, James Henry M.A., M. Inst. C.E. (*L.M.*)	Engineer, Port Trust, Calcutta.
1880	Armstrong, George Allman .	Timoleague and Courtmacsherry Light Ry., Bandon, Co. Cork.
1877	Aspinall, John Audley Frederick, M. Inst. C.E. (*L.M.*, *Past President*)	Lancashire and Yorkshire Ry Works, Horwich.
1880	Backhouse, Marmaduke, M.A.I. (*Honorary Secretary*)	9 Harcourt-terrace, Dublin.
1902	Bain, Andrew W. (Major, R.E.)	Johannesburg, Transvaal Colony, S.A.

Digitized by Google

ELECTED		
1896	Barnard, Albert William . .	Coolyhane House, Macroom, Co. Cork.
1896	Barnes, Robert Stephenson .	Tatestown, Navan, Co. Meath.
1876 A 1879 M	Barnes, John Frederick Evelyn, M. Inst. C.E. (*F.L.M.*)	Maritzburg, Natal, South Africa.
1874 A 1880 M	Barrington, Edward . .	3514 N. St., N.W., Wash., D.C., U.S.A.
1879	Banks, Wm., B.A. . . .	
1865	Beatty, John	India.
1892	Bergin, Francis, B.E. . .	Beech Grove, Kildare.
1899	Bergin, John Philip . . .	Dublin County Council Offices, 11 Rutland-square, Dublin.
1890	Berry, Joseph . . .	Town Hall, Kingstown, Co. Dublin.
1883	Birch, Edward Robert, Assoc. M. Inst. C.E. . .	Swilly-terrace, Buncrana.
1900	Brett, Henry Charles . .	19 Wellington road, Dublin.
1874	Brett, John H. (*L.M.*) . .	Co. Surveyor, Antrim; Belfast.
1895	Buckley, Michl. J. . . .	26 Bessboro'-terrace, North Circular-road, Dublin.
1876 A 1883 M	Chappell, Henry . .	The Grove, Newtownards, Co. Down.
1895	Clarke, Eugene O'Neill . .	County Surveyor, Leitrim; Carrick-on-Shannon.
1865	Clark, George R. . . .	
1870 A 1882 M	Cochrane, Robert, M.R.I.A., F.S.A., F.R.I.B.A. (*Vice-President*)	Board of Works, Dublin.
1888	Coey, Robert	St. John's, Island Bridge, Dublin.
1890	Coffee, Francis R. . . .	2 Eaton-terrace, Tramore

Digitized by Google

ELECTED		
1902	Collen, Wm., M. Inst. C.E.	County Surveyor, Dublin, 70 Upper Leeson-street, Dublin.
1886	Comber, Patrick Forstall . M. Inst. C.E., F.S.I.	19 Lower Leeson-street, Dublin.
1865	Cooke, Theodore, M.A. (*F.L.M.*)	Imperial Institute, London.
1861	Cotton, Charles Philip, M. Inst. C.E. (*Past President*)	Ryecroft, Bray, Co. Wicklow.
1900	Cowan, Peter Chalmers, M. Inst. C.E.	Local Government Board, Dublin.
1860	Crawford, Robt., M.E., M. Inst. C.E.	Stonewold, Ballyshannon, Co. Donegal.
1883	Creery, Leslie, B.A.I.	Fortal, Killiney, Co. Dublin.
1892	Cusack, Henry Edward	M. G. W. Ry. Works, Broadstone, Dublin.
1884 A / 1899 M	De Burgh, Ernest Macartney	Union Bank of Australia, Sydney, N.S.W.
1900	Dick, Fred. J., M. Inst. C.E. (*Member of Council*)	Board of Works, Dublin.
1863	Dillon, James, M. Inst. C.E., (*Past President*)	36 Dawson-street, and Stratford House, Glenageary, Co. Dublin.
1898	Dixon, E. K., M. Inst. C.E.	County Surveyor, South Mayo; Castlebar.
1862	Dodd, George (*F.L.M.*)	
1888	Doyle, Patrick (*F.L.M.*), M.R.I.A., F.R.S.	19 Lall Bazar, Calcutta.
1878	Duffin, William Edmund L'Estrange	County Surveyor, Waterford; Larkfield, Waterford.
1898	Fallon, Bernard N.	Netterville Lodge, Toomard, Ballinasloe.
1873 A / 1899 M	Ferguson, William, B.E., M.A., M. Inst. C.E.	Harbour Board, Wellington, New Zealand.
1900	Fortescue, Matthew,	57 Grosvenor-road, Rathgar.

Digitized by Google

ELECTED		
1894	Fletcher, Francis Dudley . .	Shannon Navigation, Board of Works, Limerick.
1875	Geoghegan, Samuel . .	The Grove, Killiney, County Dublin.
1888 A 1893 M	Gilcriest, William Fawcette	Wine-street, Sligo.
1877	Glover, Edward, M.A., B.E., M. Inst. C.E., F.R.I.B.A. (*Past President*)	County Surveyor, Kildare; Courthouse, Naas.
1887 A 1892 M	Going, Shirley Russell (*L.M.*)	17 Nassau-street, Dublin, and 35 Sandycove-road, Kingstown, Co. Dublin.
1895	Gray, George David . .	36 Edenvale-road, Ranelagh, Co. Dublin.
1887	Greenhill, William . . .	Great Northern Railway, Dundalk.
1881 A 1886 M	Grierson, Thomas Benjamin, M. Inst. C.E.	15 Victoria st., Westminster, London, S.W.
1871	Griffith, John Purser, M. Inst. C.E. (*Past President*)	Greenane, Temple-rd., Rathmines, and Port and Docks Office, East-wall, Dublin.
1898	Hargrave, Joshua Harrison, B.A., B.E. .	Great Northern Railway, Amiens-street, Dublin.
1875	Harty, Spencer . . . (*Past President*)	5 Trevelyan-terrace, Rathgar, and Engineer's Office, City Hall, Dublin.
1896	Haycroft, James Isaac (*F.L.M.*)	Fontenoy, Ocean-st., Woollahra, Sydney, New Sth. Wales.
1872	Heenan, Robert Henry, M. Inst. C.E.	Port Elizabeth, Cape Colony.
1894	Hellins, Henry Herbert .	City Hall, Dublin.

Digitized by Google

ELECTED		
1887	Henderson, Ernest . . .	Canadian Pacific Railway, Smithfalls, Ontario, Canada.
1895	Hill, William Henry, junr. .	Audley House, Cork.
1901	Hope, John Basil . . .	M.G.W.Ry.(Loco. Engineers' Dept.), Broadstone, Dublin.
1897	Hurtzig, Arthur Cameron, M. Inst. C.E.	2 Queen Square-place, Westminster, London, S.W.
1882	Ivatt, Henry Alfred, M. Inst. C.E. (*Past Vice-President*)	Gt. Northern Ry., Doncaster.
1893	Johnston, George Leopold .	Armagh Sewerage Works, Armagh.
1901	Jolly, James	School-lane, Didsbury, Manchester.
1877	oyce Ar ur Edward .	County Surveyor, Westmeath; Ballinagore, Co. Westmeath.
1896	Keating, Wm. Johnson, B.E. .	28 York-road, Rathmines, Dublin.
1887	Kernaghan, William . . .	
1902	Kirwan, Robert Joseph, B.A., B.E.	Gardenfield, Tuam.
1901	Latham, Frank . . .	Municipal Buildings, Penzance.
1883	Latimer, John	11 Denny street, Tralee.
1898	Leahy, James D. . . .	Newcastle West, Co. Limerick.
1889	Leask, Robert H. . . .	37 College-green, Dublin.
1901	Lilly, Walter Elsworthy . .	39 Trinity College, Dublin.
1856	Lyons, M. E. (*F.L.M.*) . .	

Digitized by Google

ELECTED		
1884	Manning, William . .	Cookstown, Kells, Co. Meath.
1896	Martin, Frank V. (*L.M.*) .	82 North Wall, Dublin.
1898	Maunsell, Richard Edward Lloyd .	Mount Vernon, Inchicore, Dublin.
1884	Maxwell, John Francis, M.A. .	Lisna Arran, Rostrevor.
1860	M'Donnell, Alexander, M. Inst. C.E. (*Past President*)	Rydens, Hersham-road, Walton-on-Thames.
1880	M'Donald, Donald . . .	Larne Harbour, Co. Antrim.
1882 A 1892 M	M'Mullen, James F. . .	30 South Mall, Cork.
1882	Metge, Peter Ponsonby . .	Creggan, Athlone.
1877	Mills, William Hemmingway, M. Inst. C.E. (*Past President*) .	Nurney, Glenageary, and Great Northern Railway, Dublin.
1862	Moberly, Charles Henry, M. Inst. C.E. (*F.L.M.*)	33 Bennett-park, Blackheath, London, S.E.
1869 A 1874 M	Moore, Joseph Henry, M.A.I., T.C.D. (*Member of Council*)	County Surveyor, Meath; 63 Eccles-street, Dublin.
1900	Moore, William P. . . .	3 Temple-street, Dublin, and Port and Docks Office, East Wall, Dublin.
1879 A 1882 M	Morony, Henry Vereker Lloyd, B.E., Assoc. M. Inst. C.E.	Harbour Commissioners' Office, Limerick.
1866	Morris, Thomas B., M. Inst. C.E.	Messrs. King, King & Co., Bombay.
1888	Morris, William Henry . .	Belfast and Co. Down Ry., Belfast.
1881	Moynan, John Ousley, M.A. .	Co. Surveyor, North Tipperary, Nenagh.
1888	Moynan, Joseph, B.E., Assoc. M. Inst. C.E.	Dundas Shire, Hamilton, Victoria, Australia.
1883	Mulvany, Christopher, M.A., B.E., M. Inst. C.E. .	County Surveyor, Roscommon; Athlone.
1882	Myles, Thomas Joseph, B.A., M. Inst. C.E. .	Engineer's House, M.G.W. Ry., Athlone.
1901	Montgomery, Henry Bevan Slator, L.C.E., T.C.D. .	5 Elgin-road, Dublin.

Digitized by Google

ELECTED

1896	O'Neill, William Purcell . .	Edenvale, Conyngham-road, Island Bridge, Dublin, and Engineer's Office, M. G. W. Railway.
1887 A 1899 M	Ormsby, Charles Crossdaile	District Engineer's Office, M. G. W. Ry., Galway.
1869 A 1876 M	Ormsby, Robert Daly, M. Inst. C.E.	Director of Public Works, Hong Kong.
1892 A 1898 M	O'Sullivan, John G., Assoc. M. Inst. C.E. .	2 Charleville-terrace, N.C.R., Dublin.
1888	Parry, William Kaye, M.A., B.E.,	63 Dawson-street, Dublin, and 6 Charlemont-terrace, Kingstown.
1898	Parshall, Horace F. . .	8 Princes's-street, Bank, London, E.C.
1891 A 1891 M	Payne, Sinclair William .	Upton House, Cork.
1895	Perrott, William George, B.A., B.E., Assoc. M. Inst. C.E.	Montrose, St. Lawrence-road, Clontarf.
1874	Pigot, Thomas F. (*Past President*)	14 Fitzwilliam-place, Dublin.
1897	Porter, Samuel . . .	27 Beresford-road, Oxton, Cheshire.
1897	Price, Alfred Dickinson, M.A. Ing., M. Inst. C.E. .	3 Fortfield-villas, Palmerston-park, and Local Government Board, Dublin.
1896	Price, James, M. Inst. C.E. .	Engineer, Harbour Commissioners, Cork.
1865	Price, W. H., M. Inst. C.E. .	
1883 A. 1901 M.	Purcell, Marmaduke . .	78 Upper Leeson-st., Dublin.
1874 A 1893 M	Ross, George Murray, M.A., B.E. (*Member of Council*)	63 Dawson-street, Dublin

Digitized by Google

ELECTED		
1884	Ross, William, B.A.I., T.C.D. (*Vice-President and Hon. Treas.*)	66 North Wall, Dublin, and Summerfield, Dalkey.
1893	Rowe, James Thomas . .	25 St. Andrew's-terrace, North Circular-road, Dublin.
1896	Ruddle, Mark (*Member of Council*)	45 Londonbridge-road, Dublin.
1896	Ryan, John Henry, M.A., M. Inst. C.E. (*President*).	22 Nassau-street, Dublin.
1882 A 1887 M	Shannon, Samuel James, B.E. (*Member of Council*)	Claremont, Meath-road, Bray.
1881	Shaw, Prosser Austin Haynes, L.C.E., T.C.D. (*Member of Council*)	21 Clarinda-park, Kingstown, and St. James' Gate Brewery, Dublin.
1896	Smith, John Chaloner . .	Pier Works, Kilronan, Aran Island, Co. Galway.
1861	Smyth, John, M.A., F.C.S. .	Milltown, near Banbridge.
1881 A 1894 M	Smyth, Richard O'Brien . (*Member of Council*)	2 Kenilworth-square, Rathgar, and Local Government Board, Dublin.
1898	Spunner, Henry Francis .	18 South Mall, Cork.
1882	Stewart, Abraham M'Causland, B.E.	20 Ship-quay-street, Derry.
1857	Stoney, Bindon Blood, F.R.S., LL.D., M.R.I.A., M. Inst. C.E. (*L.M.*, *Past President*)	14 Elgin-road, Dublin.
1868	Stoney, Edward Waller, M.E., M. Inst. C.E. (*F.L.M.*)	Chief Engineer, Madras Railway, Royapuram, Madras.
1873	Stoney, Robert Vesey (*L.M.*) .	Rosturk Castle, Co. Mayo.
1872	Stoney, Thomas Butler (*F.L.M.*)	Oakfield, Raphoe, Co. Donegal.
1880	Spence, William . . .	107 Cork-street, Dublin.
1891	Sutter, Charles H. N. . .	18 Carlisle-avenue, Donnybrook, Co. Dublin.
1844	Tate, Alexander (*L.M.*) . .	Rantalard, Belfast.
1882	Thomson, Frank William, B.E.	

Digitized by Google

ELECTED		
1901	Towle, John William . .	68 Lower Gardiner-street, Dublin.
1860	Tuthill, Robert Reeves . .	9 Mount Avenue, Ealing, London, W.
1893	Vereker, Henry Robert, F.S.I. .	Shevdilla, Westport, Co. Mayo.
1865	Waller, George Arthur, M.A. (*L.M.*)	Cangort Lodge, Hobart, Tasmania.
1862	Walpole, Thomas . . .	Windsor Lodge, Seafield-av., Monkstown, Co. Dublin.
1875	White, Henry Vincent . .	County Surveyor, Queen's Co., Ballybrophy.
1874	Willson, Frederick Richard Thomas, B.E.	Lake View, Kilrea, Co. Londonderry.
1897	Wilson, John George . .	Kylasse, Chalvey Park, Slough, Bucks.
1875 A 1882 M	Wilson, W. W., M. Inst. C.E. M.R.I.A. (*Past President*)	Ardganah, Ball's Bridge, Dublin.
1876 A 1880 M	Wise, Berkley Deane, M. Inst. C.E.	Silverstream House, Greenisland, Belfast, and Belfast and Northern Counties Railway.
1871	Wright, John Arthur (*F.L.M.*)	Cadiz Water Works, Sto. Cristo 4, Cadiz.

ASSOCIATE MEMBERS.

(*Assoc. M. Inst. C.E.I.*)

1897 A 1899 A.M.	Acton, John Henry .	Civil Eng. Staff, East Indian Railway, Calcutta.
1895 A 1899 A.M.	Ashworth, Charles Herbert	42 Dame-street, Dublin.
1879 A 1899 A.M.	Barnes, Robert Samuel Wemyss, Assoc. M. Inst. C.E.	Durban Club, Durban, Natal, and 16 Balls-road, Claughton, Birkenhead.
1900	Barnes, Robert Stephenson, junr.	Tatestown, Navan.

Digitized by Google

ELECTED		
1888 A 1899 A.M.	Barry, William Fitzgerald, Assoc. M. Inst. C.E.	County Surveyor, Monaghan; Town View, Monaghan.
1900	Blake, John . . .	Engineer's Office, Gt. N. Ry., Amiens-street, Dublin.
1901	Byrne, John Joseph .	Engineer's Office, Grand Canal, Dublin.
1901	Colaco, Alinsio Leonard (*F.L.A.M.*)	9 Hornby-road, Fort, Bombay.
1901	Crawcour, Chas. Edward Stuart	3 Seapoint-terrace, Bray.
1896 A 1899 A.M.	Delaney, James . .	County Surveyor, King's Co.; Tullamore.
1898 A 1899 A.M.	Dillon, J. Trevor . .	R. E. Office, Armagh.
1900	Douglas, Charles K. .	Rathmolyon, Enfield, Co. Meath.
1896 A 1899 A.M.	Evans, Richard . .	53 South Mall, Cork
1896 A 1899 A.M.	Fitzgerald, Cecil Henry (*F.L.A.M.*)	Assistant City Engineer, Georgetown, Demerara, British Guiana.
1895 A 1899 A.M.	Forsyth, Thomas . .	5 Royal-terrace, Fairview, Co. Dublin.
1887 A 1899 A.M.	Gaffney, Francis Sebastian, Assoc. M. Inst. C.E.	Colonial Engineer's Office, Singapore, S.S.
1886 A 1899 A.M.	Hade, Wm. Patrick .	Dublin-street, Carlow.
1896 A. 1901 A.M.	Harris, Herbert T. . .	30 Parliament-street, Dublin.
1900	Hurley, Hugh Stanislaus .	Rath Hurley, Ballylinan, Athy.
1896 A 1899 A.M.	Jackson, James Thomas .	Greenville Lodge, Upper Rathmines, Dublin.

Digitized by Google

ELECTED		
1902	Kerr, Henry Forrest .	39 Clarinda-park, West, Kingstown.
1901	Leask, Henry Norman .	Englefield, Hartington-road, Chorlton-cum-Hardy, Manchester.
1890 A 1899 A.M.	MacGarvey, Howard .	Lombard-street Works, Dublin.
1894 A 1899 A.M.	Moore, George Tighe .	184 Gt. Brunswick-street, Dublin.
1880 A 1899 A.M.	Moyers, Sir George, LL.D. .	8 Vesey-place, Kingstown.
1896 A 1899 A.M.	Newbigging, John . .	City Hall, Dublin.
1901	O'Sullivan, Patrick F. .	Tolka View, Richmond-road, Fairview, Dublin.
1902	Pansing, John . . .	Church-hill, Wicklow.
1900	Quigley, John . . .	Roscrea.
1897 A 1900 A.M.	Richardson, Thos. Henry	c/o Grindley and Groom, Calcutta.
1887 A 1902 A.M.	Rochford, John . .	4 Clarinda-park, West, Kingstown, and Board of Irish Lights.
1901	Sheehy, Bryan Edward Fitzgerald.	50 George-street, Limerick.
1893 A 1899 A.M.	Spence, Arthur Wm. .	11 Brighton-avenue, Rathgar, Dublin.
1902	Taylor, Henry Thomas .	11 Chatham-road, Rockferry, Birkenhead.
1901	Travers, Frank V. J. .	Butlerstown House, Timoleague, Co. Cork.
1890 A 1899 A.M.	Warren, George Gates .	
1902	Whieldon, Arthur Wilkinson	Berkeley-villa, Sutton, Co. Dublin.

Digitized by Google

ASSOCIATES.

(*Assoc. Inst. C.E.I.*)

ELECTED		
1896	Allen, William Henry . .	Church-place, Ennis.
1884	Anderson, Wm. (*Member of Council*)	9 Upper Sackville-street, and Glenavon, Merrion-road, Dublin.
1896	Benson, William Arthur Sanders	Fort Barracks, Bloemfontein, Orange River Colony.
1895	Bingham, Charles H. . .	Messrs. Tedcastle, M'Cormick, & Co., Dublin.
1898	Bolton, Samuel H. (*F.L.A.*) .	c/o Messrs. C. H. Walker & Co., Casilla de Correo, 796 Buenos Aires.
*1902	Callaghan, Alfred J., LL.D. .	11 Northumberland-road, Dublin.
1887	Carson, James . . .	Belmont, Solihull, Warwickshire.
*1901	Clayton, Henry F. . . .	4 Woodville, Sandiford-road, Dublin.
1896	Cuttriss, Alfred W. M. . .	R. E. Dept., Buncrana, near Londonderry.
1889	Deane, Louis E. H. . . .	Local Government Board, Dublin.
1896	Espinasse, James . . .	c/o Standard Bank of South Africa, Cape Town.
1883	Evans, James	27 Rutland-square, Dublin.
1874	Falkiner, Nathaniel L. . .	Port Chalmers, New Zealand.
1881	Fleming, Henry . . .	Chicago, U.S.A.

* Marked thus are Non-Corporate Associates.

Digitized by Google

ELECTED		
1885	Gill, Robert Paul . . .	30 Castle-street, Nenagh.
1895	Gilcriest, John Fawcette .	Wine-street, Sligo
*1901	Gordon, C. W. . . .	53 Northumberland-road, Dublin.
1879	Gray, William Armroyde . .	New York.
1898	Hargrave, Wm. Harrison .	78 Manor-street, Waterford.
1898	Harriss, George Marshall .	Electricity Works, Carlow.
1896	Hewitt, Wm. Tyrrell O. B., F.R.G.S. .	West Indian Club, Howard Hotel, Norfolk-st., London S.W.
1897	Higginbotham, Fred. Wm. .	9 Lr. Sackville-street, Dublin.
*1902	Hollywood, Alexander . .	199 Clonliffe-road, Dublin.
1896	Kelly, Cecil Fletcher . .	Johnstown House, Athlone.
1895	Lamon, Thomas W. . .	Newtownards, Co. Down.
1885	Maguire, William Robert .	Tower Hill, Dalkey, and 10 Dawson-street, Dublin.
1867	Martin, Charles E. (*L.A.*) .	82 North Wall, Dublin.
1888	Martin, John E., B.A., T.C.D. (*L.A.*) .	82 North Wall, Dublin.
1890	Martin, Thomas P. (*L.A.*) .	82 North Wall, Dublin.
1898	M'Cann, Walter . . .	Town Surveyor, Drogheda.
1895	M'Caw, George Tyrrell . .	Taghnevan, Lurgan.
1893	M'Kenzie, Colin Douglas . .	R. E. Office, Ebrington Barracks, Londonderry.
1898	Morris, Ernest Horatio . .	43 Dame-street, Dublin.
1892	Mulville, Michael Walsh . .	William-st., Listowel, Kerry.
1881	Murphy, William M. . .	Dartry, Rathmines, Dublin.

* Marked thus are Non-Corporate Associates.

Digitized by Google

ELECTED		
*1900	Nolan, Edward P. . . .	The Quoile, Downpatrick.
1897	O'Kelly, W. H. . . .	Sion House, Glenageary, Co. Dublin.
*1901	O'Neill, Thomas J. . . .	19 Crumlin-road, Belfast.
1893	Owen, Charles Austin . .	29 Molesworth-street, Dublin.
1861	Patterson, Benjamin Thomas .	95 Lr. Leeson-street, Dublin.
*1899	Pilkington, Thomas Henry .	Glenard, Clare Castle.
1895	Phillipson, Burton R. . .	Calgarth, Dalkey, Co. Dublin.
1888	Power, James Talbot, D.L. (*L.A.*)	Leopardstown Park, Co. Dublin.
1895	Reinhardt, John . . .	Qui-si-sano, Newtown-avenue, Blackrock, Co. Dublin.
1892	Strong, James Henry . .	Hammond-lane Foundry, Dublin.
1892	Stuart, William Henry . .	Cloonamore, Ballaghadereen, Co. Mayo.
*1901	Tatlow, Joseph . . .	M. G. W. Ry., Broadstone, Dublin.
1887	Tresilian, Richard S. . .	9 Sackville-street, Upper, and Cumnor, Eglinton-road, Donnybrook, Co. Dublin.
*1899	Wakeman, Wm. James Perrin .	117 Cave Hill-road, Belfast.
1888	Wallace, Charles H. . .	35 Dame-street, Dublin.
*1902	Waring, Henry . . .	Shanagarry, Miltown, Co. Dublin.

* Marked thus are Non-Corporate Associates.

Digitized by Google

ELECTED		
1887	Watson, Charles W. . .	Hollywood House, Princes-st. Melbourne, Australia.
1867	Woodward, Richard Caleb .	Brisbane, Queensland.
1881	Worthington, Robert . .	40 Dame-street, Dublin.

NOTE—*L.M., Life Member; F.L.M., Foreign Life Member; L.A.M., Life Associate Member; F.L.A.M., Foreign Life Associate Member; L.A., Life Associate; F.L.A., Foreign Life Associate.*

STUDENT.

Wilson, Hezlitt Hamilton . . .	Ardganah, Ballsbridge, Dublin.

Printed by JOHN FALCONER, 53 Upper Sackville-street, Dublin.

Digitized by Google

FIG. I.

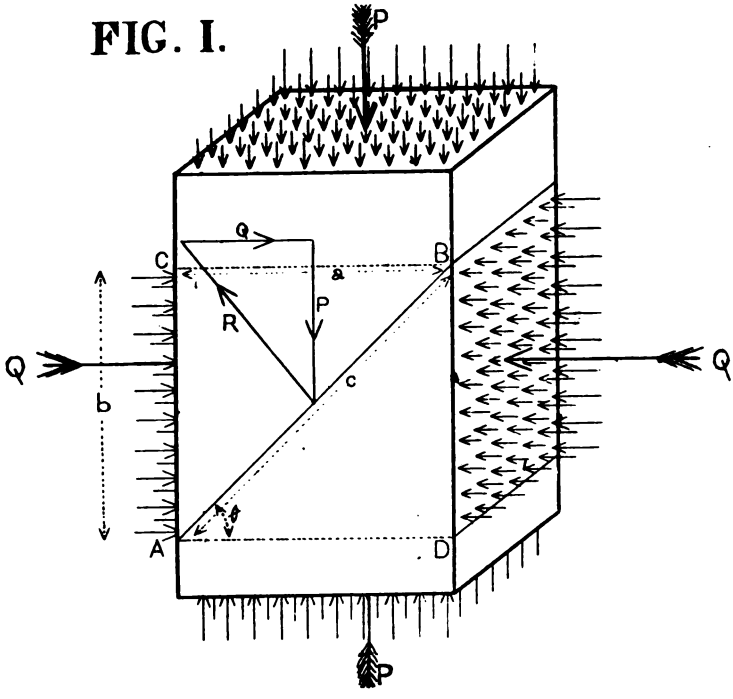

FIG. 2.

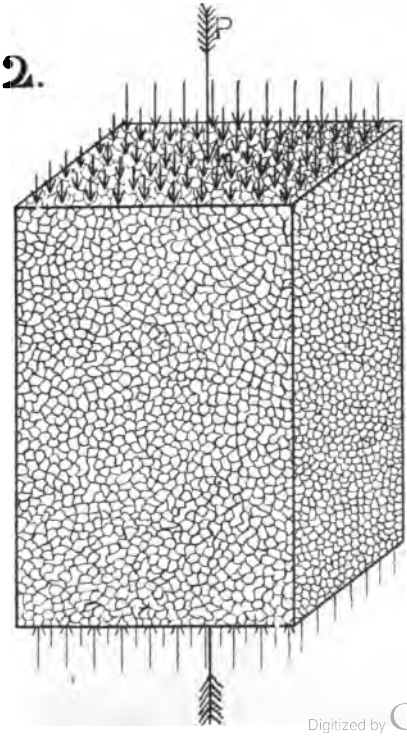

Digitized by Google

Digitized by Google

Digitized by Google

FIG. 3.

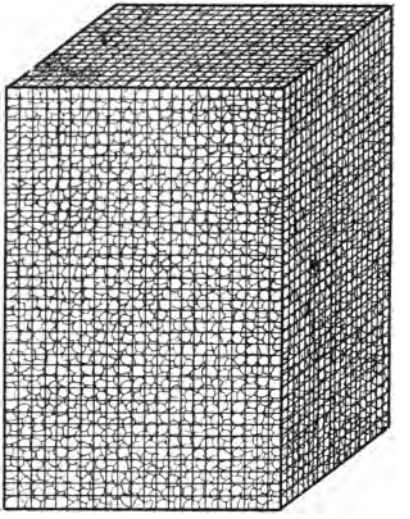

FIG. 4.

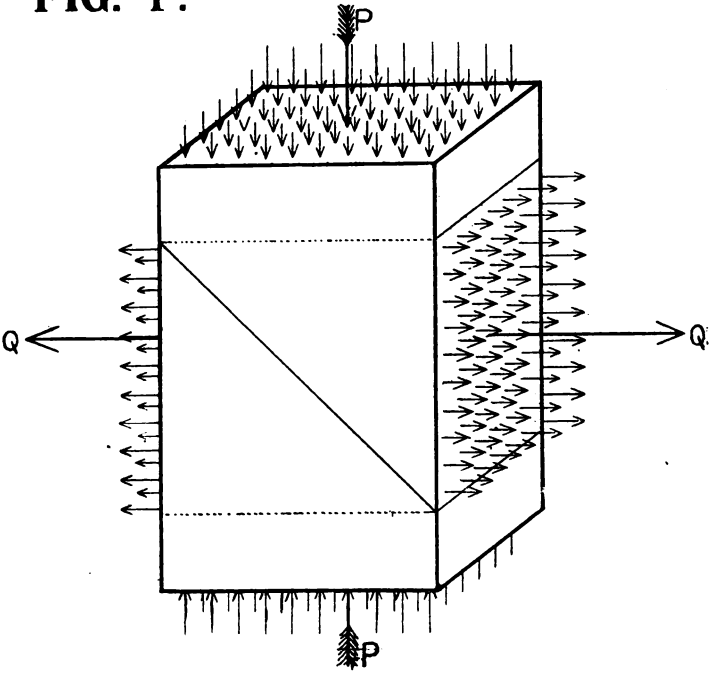

Digitized by Google

FIG. 5.

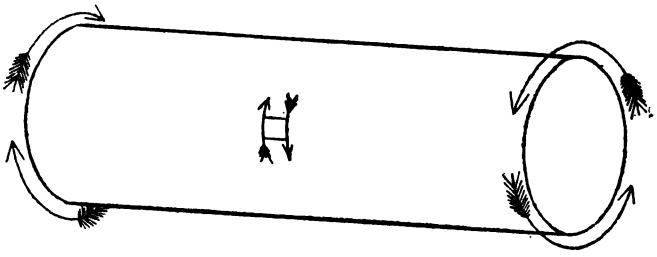

FIG. 6.

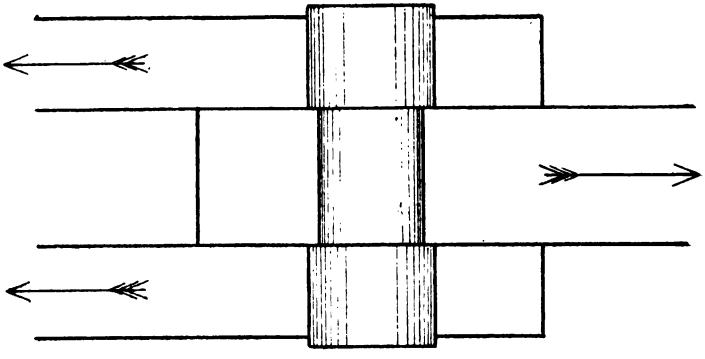

Digitized by Google

Digitized by Google

Digitized by Google

Digitized by Google